DuPont Personal Protection

Permeation Guide for
DuPont™ Tychem®
protective fabrics

DUPONT®

The miracles of science™

DuPont Personal Protection is dedicated to providing a full range of innovative safety apparel solutions. We combine the best science, technology and expertise to protect people from hazards under even the most dangerous conditions.

DuPont™ Tychem® fabrics included in this guide:

Tychem® Limited-Use Fabrics
Tychem® CPF 1, Tychem® QC, Tychem® CPF 2, Tychem® SL, Tychem® CPF 3, Tychem® F, Tychem® CPF 4, Tychem® BR, Tychem® Responder®, Tychem® TK, Tychem® Reflector®

Tychem® Reusable Fabrics
Tychem® CPE, Tychem® PVC, Tychem® Butyl

Table of Contents

Revision Data Table 2
How to use this Permeation Guide 3
Independent Testing/What is Permeation? 3
How Permeation Tests are Conducted 4
Definitions of Terms 4
Chemical Class and Subclass Listings 5
ASTM F1001 Data
- Tychem® Limited-Use Fabrics 6
- Tychem® Reusable Fabrics 7

Chemical Warfare Agents Permeation Data Table 8
Chemical Permeation Data Tables
- Tychem® Limited-Use Fabrics 9
- Tychem® Reusable Fabrics 40

Chemical Index
- Alphabetical 44
- CAS Number 59

CAUTION: This information is based upon technical data that DuPont believes to be reliable. It is subject to revision as additional knowledge and experience are gained. DuPont makes no guarantee of results and assumes no obligation or liability in connection with this information.

It is the user's responsibility to determine the level of toxicity and the proper personal protective equipment needed. The information set forth herein reflects laboratory performance of fabrics, not complete garments, under controlled conditions. It is intended for informational use by persons having technical skill for evaluation under their specific end-use conditions, at their own discretion and risk.

Anyone intending to use this information should first verify that the garment selected is suitable for the intended use. In many cases, seams and closures have shorter breakthrough times and higher permeation rates than the fabric. Please contact the garment manufacturer for specific data. If fabric becomes torn, abraded or punctured, end user should discontinue use of garment to avoid potential exposure to chemical. **Since conditions of use are outside our control, we make no warranties, express or implied, including, without limitation, no warranties of merchantability or fitness for a particular use and assume no liability in connection with any use of this information.**

This information is not intended as a license to operate under or a recommendation to infringe any patent or technical information of DuPont or others covering any material or its use.

Effective June 2004. This guide replaces all previously published until superseded.

Warning: Tychem® fabrics should not be used around heat, flames, sparks, or potentially explosive environments. Tychem® fabrics should have slip resistant or antislip materials on the outer surface of boots, shoe covers or other garment surfaces where slipping could occur.

For more information please refer to our website **www.PersonalProtection.DuPont.com** or call **1-800-931-3456.**

Copyright © 2004 E.I. du Pont de Nemours and Company. All rights reserved. The DuPont Oval logo, DuPont™, The miracles of science™, Tychem®, Responder® and Reflector® are trademarks or registered trademarks of E.I. du Pont de Nemours and Company.
StaSafe® is a registered trademark of Standard Safety Equipment Company.

Permeation Guide Revisions – see page 2 for complete details:

- All Standard Safety Equipment products have been removed
- DuPont™ Tychem® PVC and DuPont™ Tychem® CPE products have been added
- New chemical data has been added for DuPont™ Tychem® F and several other fabrics

The following chemical permeation data has been revised throughout the Permeation Guide.
Effective June 2004. Replaces all previously published until superseded.

Fabric	Chemical Name	CAS Number	Data Added	Data Revised: Previous minute / ug/cm2/min	Data Revised: Current minute / ug/cm2/min
Tychem® QC	Skydrol LD-4	95660-51-8	X		
Tychem® SL	Cyclohexanone	108-94-1	X		
Tychem® SL	Chlorobenzene	108-90-7		36 / 14.1	imm. / 5.4
Tychem® SL	N,N-Dimethylformamide	68-12-2		95 / 0.11	78 / 0.46
Tychem® CPF 2	Cyclohexanone	108-94-1	X		
Tychem® CPF 2	Chlorobenzene	108-90-7		36 / 14.1	imm. / 5.4
Tychem® CPF 2	N,N-Dimethylformamide	68-12-2		95 / 0.11	78 / 0.46
Tychem® CPF 4	Cyclohexanone	108-94-1	X		
Tychem® F	Acetaldehyde	75-07-0		109 / 0.56	imm. / 11
Tychem® F	Allyl chloride	107-05-1		imm. / <0.1	>480 / <0.1
Tychem® F	Acetone cyanohydrin	75-86-5	X		
Tychem® F	Acetyl chloride	75-36-5	X		
Tychem® F	Adiponitrile	111-69-3	X		
Tychem® F	Benzene sulfonyl chloride	98-09-9	X		
Tychem® F	Benzoyl chloride	98-88-4	X		
Tychem® F	Benzyl chloride	100-44-7	X		
Tychem® F	Bis-phenol-A-diglycidyl ether	1675-54-3	X		
Tychem® F	Borone trifluoride dimethyletherate	109-63-7	X		
Tychem® F	p-Bromofluorobenzene	460-00-4	X		
Tychem® F	n-Butanol	71-36-3	X		
Tychem® F	ChloroBenzene	108-90-7	X	70 / 0.43	>480 / <0.1
Tychem® F	ChloroSulfonic acid	7790-94-5	X		
Tychem® F	o-Chlorotoluene	95-49-8	X		
Tychem® F	Cumene	98-82-8	X		
Tychem® F	1,3-Dichloroacetone	534-07-6	X		
Tychem® F	2,3-Dichloro-1-propene	78-88-6	X		
Tychem® F	Diethylentriamine	111-40-0	X		
Tychem® F	N,N-Dimethylacetamine	127-19-5	X		
Tychem® F	Dimethylamine	124-40-3	X		
Tychem® F	N,N-Dimethylaniline	121-69-7	X		
Tychem® F	Dimethyldichlorosilane	75-78-5	X		
Tychem® F	Dimethyl sulfate	77-78-1	X		
Tychem® F	DimethylSulfide	75-18-3		26 / 0.58	271 / 1.21
Tychem® F	Ethyl cellosolve acetate	111-15-9	X		
Tychem® F	Ethyl ether	60-29-7	X		
Tychem® F	Fluorosilic acid	16961-83-4	X		
Tychem® F	Fluorobenzene	462-06-6	X		
Tychem® F	Hexamethylenediamine	124-09-4	X		
Tychem® F	Hydrogen bromide	10035-10-6	X		
Tychem® F	Hydrogen fluoride anhydrous (18°C)	7664-39-3	X		
Tychem® F	Isopropylamine	75-31-0	X		
Tychem® F	Kerosene	8008-20-6	X		

Fabric	Chemical Name	CAS Number	Data Added
Tychem® F	d-Limonene	5989-27-5	X
Tychem® F	Methyl acrylate	96-33-3	X
Tychem® F	Methacrylic acid	79-41-4	X
Tychem® F	Methyl amine gas	74-89-5	X
Tychem® F	Methyl cellosolve acetate	110-49-6	X
Tychem® F	Methylene bromide	74-95-3	X
Tychem® F	Methyl ethyl ketoxime	96-29-7	X
Tychem® F	Methylglutaronitrile	4553-62-2	X
Tychem® F	Methyl hydrazine	60-34-4	X
Tychem® F	Methyl trichlorosilane	75-79-6	X
Tychem® F	Nicotine	54-11-5	X
Tychem® F	2-Nitropropane	79-46-9	X
Tychem® F	Oleum, 40% free SO2	8014-95-7	X
Tychem® F	2-Picoline	109-06-8	X
Tychem® F	Pyridine	110-86-1	X
Tychem® F	Pyrrolidine	123-75-1	X
Tychem® F	Silicon tetrachloride	10026-04-7	X
Tychem® F	Sulfuryl chloride	7791-25-5	X
Tychem® F	Thioglycolic acid	68-11-1	X
Tychem® F	Thionyl chloride	9/7/19	X
Tychem® F	Titanium tetrachloride	7550-45-0	X
Tychem® F	1,1,2-Trichloroethane	811-97-2	X
Tychem® F	2,2,2-Trichloroethanol	115-20-8	X
Tychem® F	Trichloroethylene	79-01-6	X
Tychem® F	Trichloronitromethane	76-06-2	X
Tychem® F	Trichlorophenylsilane	98-13-5	X
Tychem® F	Trifluoromethane sulfonic acid	1493-13-6	X
Tychem® F	Vinyl acetate	108-05-4	X
Tychem® F	Vinylidene chloride	75-35-4	X
Tychem® CPF 3	Mercury	7439-97-6	X
Tychem® CPF 3	Methyl chloride	74-87-3	X
Tychem® CPF 3	Hydrogen chloride gas	7647-01-0	X
Tychem® CPF 3	2-Phenylethanal	60-12-8	X
Tychem® BR	MethaneSulfonyl chloride	124-63-0	X
Tychem® BR	Tripropylamine	102-69-2	X
Tychem® Responder®	MethaneSulfonyl chloride	124-63-0	X
Tychem® Responder®	Tripropylamine	102-69-2	X
Tychem® TK	MethaneSulfonyl chloride	124-63-0	X
Tychem® TK	Tripropylamine	102-69-2	X
Tychem® Reflector®	MethaneSulfonyl chloride	124-63-0	X
Tychem® Reflector®	Tripropylamine	102-69-2	X

All Standard Safety Equipment data has been removed.
DuPont™Tychem® PVC and DuPont™Tychem® CPE products have been added.

Copyright © 2004 E. I. du Pont de Nemours and Company. All rights reserved.

Permeation Guide for DuPont™ Tychem® Protective Fabrics

Effective June 2004. This guide replaces all previously published until superseded.

How to Use this Permeation Guide

To Find Permeation Test Results

1. Locate the desired chemical in the **Chemical Index.**

   The **Chemical Index** is presented in two ways:

   - **Alphabetical** Index
   - Index by **Chemical Abstract System (CAS) Number**

   For each chemical, the following information is listed.
   - Chemical name
   - Chemical subclass number(s)
   - CAS number
   - Chemical name used in data table if name listed is a synonym
   - Whether the chemical has been tested (T) or not tested (nt) on Tychem® Limited-Use and/or Tychem® Reusable Fabrics

2. Locate the subclass(es) of the chemical in the permeation data table(s). There are two separate data tables, one for limited use fabrics, and one for reusable fabrics.

3. If the chemical has been tested, find the chemical name under its sub-class(es) and read across to find the permeation test results for the chemical.

4. If the chemical has not been tested, the subclass number is provided so users may view permeation data for tested chemicals in the same subclass.

Independent Testing

All permeation tests are conducted for DuPont by independent testing laboratories. Except for the chemical warfare agents, all results are based on ASTM F739, "Test Method for Resistance of Protective Clothing Materials to Permeation by Liquids or Gases under Continuous Contact". Chemical warfare agents are tested using MIL-STD282.

All tests were conducted at room temperature unless otherwise noted. Copies of individual reports are available by calling 1-800-931-3456.

What is Permeation?

Permeation is a difficult concept to grasp because it can't be seen and does not require a hole in the barrier. It occurs when a chemical is absorbed until it saturates the barrier and then desorbs, or diffuses, from the opposite surface.

You may have experienced permeation firsthand if you stepped in gasoline at a filling station. If you noticed the odor of gasoline in your car as you drove away you experienced two of the three steps involved in permeation - absorption and desorption. The soles of your shoes absorbed some gasoline, then you smelled it as it desorbed from the bottom surface of your shoe. If you had stood in the gasoline long enough, the sole of your shoe would have become saturated with gasoline and the vapors would have started to desorb inside your shoe.

When it comes to hazardous liquids, vapors or gases, permeation testing is required.

DuPont™ is a trademark of E. I. du Pont de Nemours and Company.
Tyvek® and Tychem® are registered trademarks of E. I. du Pont de Nemours and Company.

Copyright © 2004 E. I. du Pont de Nemours and Company. All rights reserved.

How Permeation Tests Are Conducted

Permeation tests are conducted following the ASTM F739 "Test Method for Resistance of Protective Clothing Materials to Permeation by Liquids and Gases." A swatch of test fabric is inserted into a special test cell, with the outside surface of the fabric toward the challenge chamber, thus exposing it to a challenge chemical. The inside surface of the fabric is toward the sampling chamber. If the chemical moves through the protective clothing fabric and is detected on the inside surface of the fabric, it is said to have permeated the fabric.

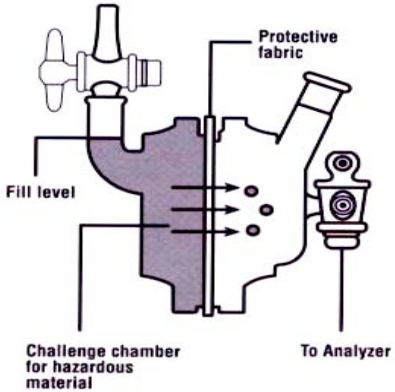

ASTM F739 Test Cell

Definitions of Terms for ASTM F739

Permeation rate: The rate at which the challenge chemical permeates the fabric. In these tables, the permeation rate reflects the steady state rate when chemical contact is continuous and all forces affecting permeation have reached equilibrium.

Minimum Detectable Permeation Rate (MDPR): The minimum permeation rate that can be detected during a permeation test. MDPR is a function of the sensitivity of the analytical measurement technique, the volume into which the permeant is collected, and sampling time. Minimum detectable permeation rates as low as 0.001 μg/cm^2/minute are possible for many chemicals.

Actual breakthrough time: The time between initial contact of the chemical with the outside surface of the fabric and the detection of permeation.

An actual breakthrough time of >480 does not mean there was no breakthrough. It means that permeation was not detected. Permeation may have occurred, but at a rate less than the minimum detectable permeation rate (MDPR).

Normalized breakthrough time: The time at which permeation rate reaches 0.1 μg/cm^2/min. Normalized breakthrough times are used in this table. They are used for fabric comparison because they eliminate test sensitivity issues.

A normalized breakthrough time of >480 minutes does not mean there was not permeation; it means that the rate of permeation did not exceed 0.1 μg/cm^2/min during the 8-hour test. When the normalized breakthrough time is ten minutes or less, DuPont chooses to report the breakthrough time as immediate.

Results of permeation tests are variable. The results reported here are averages of three or more separate tests. Users should not be misled in assuming these breakthrough times and permeation rates are exact. This variability should be taken into account in material selection. (See ASTM F739.)

PLEASE NOTE: in Europe, normalized breakthrough times are based on a permeation rate of 1.0 μg/cm^2/min . This is 10 times less sensitive than the basis used in North America.

Physical phase: The phase of the challenge chemical during the test being reported: solid-S, liquid-L, gas-G, mixture-M.

CAS: Chemical Abstract System

N/A: Not applicable

DuPont™ is a trademark of E. I. du Pont de Nemours and Company. Tychem® is a registered trademark of E. I. du Pont de Nemours and Company.

Copyright © 2004 E. I. du Pont de Nemours and Company. All rights reserved.

CHEMICAL CLASS & SUBCLASS LISTING*

100 Carboxylic acids
- 102 Aliphatic and Alicyclic, Unsubstituted
- 103 Aliphatic and Alicyclic, Substituted
- 104 Aliphatic and Alicyclic, Polybasic

110 Acid Halides, Carboxylic
- 111 Aliphatic and Alicyclic
- 112 Aromatic
- 113 Chloroformates

120 Aldehydes
- 121 Aliphatic and Alicyclic
- 122 Aromatic

130 Amides
- 132 Aliphatic and Alicyclic
- 135 Acrylamides

140 Amines
- 141 Aliphatic and Alicyclic, Primary
- 142 Aliphatic and Alicyclic, Secondary
- 143 Aliphatic and Alicyclic, Tertiary
- 145 Aromatic, Primary
- 146 Aromatic, Secondary and Tertiary
- 148 Aliphatic and Alicyclic Polyamines
- 149 Aromatic Polyamines

160 Anhydrides
- 161 Aliphatic and Alicyclic

210 Isocyanates
- 211 Aliphatic and Alicyclic
- 212 Aromatic

220 Carboxylic Esters
- 221 Formates
- 222 Acetates
- 223 Acrylates and Methacrylates
- 224 Aliphatic, Others
- 225 Lactones
- 226 Benzoates and Phthalates

230 Non-Carboxylic Esters
- 233 Carbamates and Others

240 Ethers
- 241 Aliphatic and Alicyclic
- 245 Glycol Ethers
- 246 Vinylic

260 Halogen Compounds
- 261 Aliphatic and Alicyclic
- 263 Aromatic
- 264 Vinylic
- 265 Alylic
- 266 Benzylic

270 Heterocyclic Compounds
- 271 Nitrogen, Pyridines
- 274 Nitrogen, Others
- 275 Oxygen, Epoxides
- 277 Oxygen, Furans
- 278 Oxygen, Others

280 Hydrazines

290 Hydrocarbons
- 291 Aliphatic and Alicyclic, Saturated
- 292 Aromatic
- 293 Aromatic Polynuclear
- 294 Aliphatic and Alicyclic, Unsaturated
- 296 Polyenes

300 Peroxides

310 Hydroxylic Compounds
- 311 Aliphatic and Alicyclic, Primary
- 312 Aliphatic and Alicyclic, Secondary
- 313 Aliphatic and Alicyclic, Tertiary
- 314 Aliphatic and Alicyclic, Polyols
- 315 Aliphatic and Alicyclic, Substituted
- 316 Aromatic, Phenols
- 318 Aromatic, Others

330 Elements

340 Inorganic Salts (Solutions)

345 Inorganic Cyano Compounds

350 Inorganic Gases and Vapors

360 Inorganic Acid Halides

365 Inorganic Acid Oxides

370 Inorganic Acids

380 Inorganic Bases

390 Ketones
- 391 Aliphatic and Alicyclic
- 392 Aromatic

430 Nitriles
- 431 Aliphatic and Alicyclic
- 432 Aromatic

440 Nitro Compounds
- 441 Unsubstituted
- 442 Substituted

450 Nitroso Compounds

460 Organo-Phosphorus Compounds
- 462 Derivatives of Phosphorus-based acids

470 Organo-Metallic Compounds

480 Organo-Silicon Compounds

500 Sulfur Compounds
- 501 Thiols
- 502 Sulfides and Disulfides
- 503 Sulfones and Sulfoxides
- 504 Sulfonic Acids
- 505 Sulfonyl Chlorides
- 507 Sulfonates, Sulfates,and Sulfites
- 509 Other

550 Organic Salts (Solutions)

590 Miscellaneous (Not classified)

595 Chemical Warfare Agents

*Partial list based on ASTM F1186. A complete copy of ASTM F1186 may be purchased from ASTM.

DuPont™ is a trademark of E. I. du Pont de Nemours and Company.
Tyvek® and Tychem® are registered trademarks of E. I. du Pont de Nemours and Company.

Copyright © 2004 E. I. du Pont de Nemours and Company. All rights reserved.

ASTM F1001 List of Challenge Chemicals (Permeation Test Method ASTM F739)

Standardized Breakthrough Times for DuPont™ Tychem® Limited Use Fabrics

Sub-Class	Chemical Name	CAS Number	Phase	Standardized Breakthrough Time (Minutes)										
				Tychem® CPF 1	Tychem® QC	Tychem® CPF 2	Tychem® SL	Tychem® CPF 3	Tychem® F	Tychem® CPF 4	Tychem® BR / Tychem® LV	Tychem® Responder®	Tychem® TK	Tychem® Reflector®
391	Acetone	67-64-1	L	imm.	imm.	12	12	>480	>480	>480	>480	>480	>480	>480
431	Acetonitrile	75-05-8	L	imm.	imm.	12	12	imm.	157	>480	>480	>480	>480	>480
350	Ammonia gas	7664-41-7	G		imm.	32	32	12	79	>480	46	>480	>480	>480
296	1,3-Butadiene	106-99-0	G		imm.	>480	>480	>480	>480	>480	>480	>480	>480	>480
502	Carbon disulfide	75-15-0	L	imm.	imm.	imm.	imm.	16	>480	>480	>480	>480	>480	>480
330 / 350	Chlorine gas	7782-50-5	G		imm.	>480	>480	>480	>480*	>480	>480	>480	>480	>480
261	Dichloromethane	75-09-2	L	imm.	imm.	imm.	imm.	imm.	imm.	114	432	>480	>480	>480
142	Diethylamine	109-89-7	L	imm.	imm.	12	12	>480	>480	>480	>480	>480	>480	>480
132	N,N-Dimethylformamide	68-12-2	L	25	imm.	78	78	>480	>480	>480	>480	>480	>480	>480
222	Ethyl acetate	141-78-6	L	imm.	imm.	14	14	>480	>480	>480	>480	>480	>480	>480
275	Ethylene oxide gas	75-21-8	G		imm.	imm.	imm.	>480	65	305	>480	>480	>480	>480
291	n-Hexane	110-54-3	L	imm.	imm.	10	10	>480	>480	>480	>480	>480	>480	>480
350	Hydrogen chloride gas	7647-01-0	G		imm.	>480	>480	>480	>480	>480	>480	>480	>480	>480
311	Methanol	67-56-1	L	imm.	imm.	>480	>480	imm.	77	>480	157	>480	>480	>480
261	Methyl chloride	74-87-3	G		imm.	>480	>480	>480	>480	>480	>480	>480	>480	>480
441	Nitrobenzene	98-95-3	L	imm.	imm.	102	102	>480	>480	>480	>480	>480	>480	>480
380	Sodium hydroxide, 50%	1310-73-2	L	>480	>480	>480	>480	>480	>480	>480	>480	>480	>480	>480
370	Sulfuric acid, 98%	7664-93-9	L	>480	>480	>480	>480	>480	>480	>480	>480	>480	>480	>480
264	1,1,2,2-Tetrachloroethylene	127-18-4	L	imm.	imm.	imm.	imm.	>480	>480	>480	>480	>480	>480	>480
241	Tetrahydrofuran	109-99-9	L	imm.	imm.	imm.	imm.	>480	464	>480	>480	>480	>480	>480
292	Toluene	108-88-3	L	imm.	imm.	imm.	imm.	>480	>480	>480	>480	>480	>480	>480

> = greater than imm. = immediate (<10 minutes) L = Liquid G = Gas

DuPont™ is a trademark of E. I. du Pont de Nemours and Company.
Tyvek®, Tychem®, Responder®, and Reflector® are registered trademarks of E. I. du Pont de Nemours and Company.

Copyright © 2004 E. I. du Pont de Nemours and Company. All rights reserved.

ASTM F1001 List of Challenge Chemicals (Permeation Test Method ASTM F739)

Standardized Breakthrough Times for DuPont™ Tychem® Reusable Fabrics

Sub-Class	Chemical Name	CAS Number	Phase	Standardized Breakthrough Time (Minutes)		
				DuPont™ Tychem® CPE	DuPont™ Tychem® Butyl	DuPont™ Tychem® PVC
391	Acetone	67-64-1	L	54	125	imm.
431	Acetonitrile	75-05-8	L	316	120	imm.
350	Ammonia gas	7664-41-7	G	>480		
296	1,3-Butadiene	106-99-0	G	357		
502	Carbon disulfide	75-15-0	L	imm.	imm.	imm.
330 / 350	Chlorine gas	7782-50-5	G	417		
261	Dichloromethane	75-09-2	L	13	imm.	imm.
142	Diethylamine	109-89-7	L	45	imm.	15
132	N,N-Dimethylformamide	68-12-2	L	249	>480	24
222	Ethyl acetate	141-78-6	L	54	28	imm.
275	Ethylene oxide gas	75-21-8	G	80		
291	n-Hexane	110-54-3	L	78	imm.	imm.
350	Hydrogen chloride gas	7647-01-0	G	>480		
311	Methanol	67-56-1	L	>480	304	13
261	Methyl chloride	74-87-3	G	>480		
441	Nitrobenzene	98-95-3	L	169	>480	>480
380	Sodium hydroxide, 50%	1310-73-2	L	>480	>480	>480
370	Sulfuric acid, 95%	7664-93-9	L	>480	160	150
264	1,1,2,2-Tetrachloroethylene	127-18-4	L	61	imm.	13
241	Tetrahydrofuran	109-99-9	L	20	imm.	imm.
292	Toluene	108-88-3	L	20	imm.	imm.

> = greater than imm. = immediate (<10 minutes) = not tested L = Liquid G = Gas

*Actual breakthrough time; standardized data not available.

DuPont™ is a trademark of E. I. du Pont de Nemours and Company.
Tyvek®, Tychem®, Responder®, and Reflector® are registered trademarks of E. I. du Pont de Nemours and Company.

Copyright © 2004 E. I. du Pont de Nemours and Company. All rights reserved.

Chemical Warfare Agents

Permeation test results are shown as follows:

Average Breakthrough Time (minutes) / Minimum Detectable Permeation Rate (µg/cm2/min)

> = greater than
< = less than
= not tested

Age	Common Name	CAS Number	Protocol	Tychem® CPF 2	Tychem® SL	Tychem® CPF 3	Tychem® F	Tychem® CPF 4	Tychem® BR and Tychem® LV	Tychem® Responder®	Tychem® TK	Tychem® Reflector®
GA	Tabun	77-81-6	DN5						>720	>720	>720	>720
									8×10^{-7}	8×10^{-7}	8×10^{-7}	8×10^{-7}
			DN6				>720				>720	
							2×10^{-6}				4×10^{-7}	
GB	Sarin	107-44-8	DN5	360	360	120		360	>720	>720	>720	>720
				1×10^{-5}	1×10^{-5}	0.004		1×10^{-5}	4.2×10^{-7}	4.2×10^{-7}	4.2×10^{-7}	4.2×10^{-7}
			DN6				>720		>720	>720	>720	>720
							2×10^{-6}		4×10^{-4}	4×10^{-4}	1×10^{-6}	4×10^{-4}
GD	Soman	99-64-0	DN5			>480			>720	>720	>720	>720
						0.004			4.2×10^{-7}	4.2×10^{-7}	2.1×10^{-7}	4.2×10^{-7}
			DN6				>720				>720	
							2×10^{-6}				4×10^{-7}	
HD	Sulfur Mustard	505-60-2	DN3	180	180	120		180	>720	>720	>720	>720
				0.002	0.002	0.004		0.002	4.2×10^{-7}	4.2×10^{-7}	0.00021	4.2×10^{-7}
			DN4				>720		>720	>720	>720	>720
							<0.002		8×10^{-4}	8×10^{-4}	8×10^{-4}	8×10^{-4}
L	Lewisite	541-25-3	DN3	>360	>360	120		>360	>720	>720	>720	>720
				8×10^{-4}	8×10^{-4}	0.005		8×10^{-4}	2.5×10^{-5}	2.5×10^{-5}	0.0000125	2.5×10^{-5}
			DN4				360		120	120	>720	120
							0.006		7×10^{-5}	7×10^{-5}	8×10^{-4}	7×10^{-5}
VX	VX Nerve Age	50782-69-9	DN5	>720	>720	>480		>720	>720	>720	>720	>720
				5×10^{-7}	5×10^{-7}	0.0042		5×10^{-7}	4.2×10^{-7}	4.2×10^{-7}	2.1×10^{-7}	4.2×10^{-7}
			DN6				>720		>720	>720	>720	>720
							2×10^{-6}		8×10^{-7}	8×10^{-7}	8×10^{-7}	8×10^{-7}

Fabric Test Protocols. All tests performed in triplicate for DuPont Personal Protection by an independe accredited laboratory at 22ºC, 50% R.H.

Protocol DN3 - MIL-STD-282, Method T-209 (HD) or modified for Lewisite, for 12 hours at 10 g/m2.
Protocol DN4 - MIL-STD-282, Method T-209 (HD) or modified for Lewisite, for 12 hours at 100 g/m2 (total coverage).
Protocol DN5 - MIL-STD-282, Method T-208 (GB) or modified for GA, GD, and VX, for 12 hours at 10 g/m2.
Protocol DN6 - MIL-STD-282, Method T-208 (GB) or modified for GA, GD, and VX, for 12 hours at 100 g/m2 (total coverage).

DuPont™ is a trademark of E. I. du Pont de Nemours and Company.
Tyvek®, Tychem®, Responder®, and Reflector® are registered trademarks of E. I. du Pont de Nemours and Company.

Copyright © 2004 E. I. du Pont de Nemours and Company. All rights reserved.

Data Table for Tychem® Limited-Use Fabrics

Permeation test results are listed as follows:

Average Standardized BreakthroughTime (minutes) / Average Steady-State Permeation Rate (μg/cm²/min.)

Symbols and Abbreviations used in data table:

> = more than < = less than imm. = immediate (less than 10 minutes)

nm = not measured nd = not detected S = Solid L = Liquid G = Gas

* Actual breakthrough time; standardized data not available.

Class	Sub- Class	Chemical Name	CAS	Phase	Tychem® CPF 1	Tychem® QC	Tychem® CPF 2	Tychem® SL	Tychem® CPF 3	Tychem® F	Tychem® CPF 4	Tychem® BR and Tychem® LV	Tychem® Responder®	Tychem® TK	Tychem® Reflector®
100 Carboxylic acids															
	102 Aliphatic and Alicyclic, Unsubstituted														
		Acetic acid	64-19-7	L		imm.	>480	>480	84	>480	>480	339	>480	>480	>480
						3	<0.1	<0.1	1.21	0.08	<0.1	1.3	<0.1	<0.1	<0.1
		Acetic acid, 84%	64-19-7	L							>480				
											<0.1				
		Acrylic acid	79-10-7	L		imm.	>480	>480		>480	>480	270	>480	>480	270
						5.4	<0.001	<0.001		<0.001	<0.001	1.6	<0.1	<0.06	1.6
		Butyric acid	107-92-6	L									>480		
													<0.1		
		Formic acid	64-18-6	L		imm.	>480	>480	>480	>390	>480	>480	>480	>480	>480
						0.33	<0.1	<0.1	<0.01	<0.01	<0.1	<0.01	<0.1	<0.01	<0.01
		Methacrylic acid	79-41-4	L						>480		>480	>480	>480	>480
										<0.0001		<0.01	<0.1	<0.01	<0.01
		Octanoic acid	124-07-2	L							>480				
											<0.1				
		Propionic acid	79-09-4	L									>480		
													<0.1		
	103 Aliphatic and Alicyclic, Substituted														
		Chloroacetic acid	79-11-8	L						>480		>480	>480	>480	>480
										<0.1		<0.1	<0.1	<0.1	<0.1
		Chloroacetic acid (65ºC)	79-11-8	L									60		
													63.7		
		Chloroacetic acid, 75-80%	79-11-8	L		370	>480	>480			>480	>480	>480	>480	>480
						1	<0.1	<0.1			<0.1	<0.01	<0.01	<0.01	<0.01
		Glycolic acid, sat. sol. in water	79-14-1	L								>480	>480	>480	>480
												<0.1	<0.1	<0.1	<0.1
		Thioglycolic acid	68-11-1	L						>480		>480	>480	>480	>480
										<0.0001		<0.1	<0.1	<0.1	<0.1
		Trichloroacetic acid	76-03-9	L						>480					
										<0.1					
		Trifluoroacetic acid	76-05-1	L			>480	>480		>480	>480		>480		
							<0.1	<0.1		<0.01	<0.1		<0.1		

Copyright © 2004 E. I. du Pont de Nemours and Company. All rights reserved.

Data Table for Tychem® Limited-Use Fabrics

Class	Sub- Class	Chemical Name	CAS	Phase	Tychem® CPF 1	Tychem® QC	Tychem® CPF 2	Tychem® SL	Tychem® CPF 3	Tychem® F	Tychem® CPF 4	Tychem® BR and Tychem® LV	Tychem® Responder®	Tychem® TK	Tychem® Reflector®
	104 Aliphatic and Alicyclic, Polybasic														
		Maleic acid, sat.	110-16-7	L									>480		
													<0.1		
		Oxalic acid, 10.5%	144-62-7	L								>480	>480	>480	>480
												<0.1	<0.1	<0.1	<0.1
		Oxalic acid dihydrate, sat. sol.	6153-56-6	L					>480						
									<0.1						
110 Acid Halides, Carboxylic															
	111 Aliphatic and Alicyclic														
		Acetyl chloride	75-36-5	L			37*	37*		>480	37*	181	>240	>480	181
							1.1	1.1		<0.0014	1.1	2	<0.1	<0.05	2
		Chloroacetyl chloride	79-04-9	L			120	120	77		120	160	>480	160	160
							15.6	15.6	1.03		15.6	23.2	<0.1	23.2	23.2
		Dichloroacetyl chloride	79-36-7	L								100	100	>480	100
												20.5	20.5	<0.01	20.5
		Trifluoroacetyl chloride	354-32-5	G									>480		
													<0.1		
	112 Aromatic														
		Benzoyl chloride	98-88-4	L					>480	>480		>480	>480	>480	>480
									<.001	<0.05		<0.05	<0.05	<0.05	<0.05
	113 Chloroformates														
		Benzyl chloroformate	501-53-1	L					>480						
									<0.1						
		Methyl chloroformate	79-22-1	L								>480	>480	>480	>480
												0.011	0.011	0.011	0.011
120 Aldehydes															
	121 Aliphatic and Alicyclic														
		Acetaldehyde	75-07-0	L						imm.	>480	>480	>480	>480	>480
										11	<0.1	<0.01	<0.1	<0.01	<0.01
		Acrolein	107-02-8	L			60	60		63	60	>480	>480	>480	>480
							4.1	4.1		0.41	4.1	<0.02	<0.02	<0.02	<0.02
		Acrolein, 59%	107-02-8	L			imm.	imm.			imm.	>480	>480	>480	>480
							5.3	5.3			5.3	<0.1	<0.1	<0.1	<0.1
		n-Butyraldehyde	123-72-8	L		imm.	50	50			50	>480	>480	>480	>480
						22	6.1	6.1			6.1	<0.007	<0.1	<0.007	<0.007
		trans-Crotonaldehyde	123-73-9	L			38	38			38	>480	>480	>480	>480
							0.77	0.77			0.77	<0.006	<0.01	<0.006	<0.006
		Formaldehyde gas, 100 ppm	50-00-0	G								>480	>480	>480	>480
												<0.01	<0.01	<0.01	<0.01
		Formaldehyde gas, 1000 mg/m^3	50-00-0	G									>480		
													<0.1		

Copyright © 2004 E. I. du Pont de Nemours and Company. All rights reserved.

Data Table for Tychem® Limited-Use Fabrics

Class	Sub- Class	Chemical Name	CAS	Phase	Tychem® CPF 1	Tychem® QC	Tychem® CPF 2	Tychem® SL	Tychem® CPF 3	Tychem® F	Tychem® CPF 4	Tychem® BR and Tychem® LV	Tychem® Responder®	Tychem® TK	Tychem® Reflector®
		Formalin (Formaldehyde 37%)	50-00-0	L		imm.	>480	>480	>480	>480	>480	>480	>480	>480	>480
						0.31	<0.1	<0.1	<0.1	<0.001	<0.1	<0.09	<0.09	<0.09	<0.09
		Formalin, 10%	50-00-0	L		>480									
						0.003									
		Gluteraldehyde, 5% aqueous sol.	111-30-8	L		>480	>480	>480			>480	>480	>480	>480	>480
						<0.02	<0.04	<0.04			<0.04	<0.1	<0.1	<0.1	<0.1
		Gluteraldehyde, 50%	111-30-8	L	>480		>480	>480			>480	>480	>480	>480	>480
					<0.1		<0.1	<0.1			<0.1	<0.1	<0.1	<0.1	<0.1
		Propionaldehyde	123-38-6	L									>480		
													<0.1		
	122 Aromatic														
		Benzaldehyde	100-52-7	L							>480				
											<0.1				
		2-Furaldehyde	98-01-1	L			245*	245*	>480	>480	245*	>480	>480	>480	>480
							0.2	0.2	<0.1	0.01	0.2	<0.01	<0.01	<0.01	<0.01
130 Amides															
	132 Aliphatic and Alicyclic														
		N,N-Dimethylacetamide	127-19-5	L			64*	64*	>480	>480	64*	>480	>480	>480	>480
							2.04	2.04	<0.1	<0.05	2.04	<0.006	<0.1	<0.006	<0.006
		N,N-Dimethylacetamide, 8% in water	127-19-5	L		>480									>480
						<0.0069									<0.006
		N,N-Dimethylformamide	68-12-2	L	25	imm.	78	78	>480	>480	>480	>480	>480	>480	>480
					0.26	0.72	0.46	0.46	<0.1	<0.01	<0.1	<0.001	<0.1	<0.01	<0.1
		N-Methylformamide	123-39-7	L					>480	>480					
									<0.04	<0.05					
		n-Methyl-2-pyrrolidone	872-50-4	L			>480	>480		>480	>480	>480	>480	>480	>480
							<0.06	<0.06		<0.001	<0.1	<0.01	<0.01	<0.01	<0.01
	135 Acrylamides														
		Acrylamide, 50% in water	79-06-1	L			>480	>480		>480	>480	>480	>480	>480	>480
							<0.01	<0.01		<0.01	<0.1	<0.1	<0.1	<0.1	<0.1
		N,N-Dimethylacetamine, 8% in water	127-19-4	L		>480									
						<0.0069									
		N-Methylmethacrylamide	3887-02-3	L									>480		
													<0.1		
140 Amines															
	141 Aliphatic and Alicyclic, Primary														
		n-Butylamine	109-73-9	L					>480			>480	>480	>480	>480
									<0.1			<0.01	<0.1	<0.01	<0.01
		tert-Butylamine	75-64-9	L								>480	>480	>480	>480
												<0.03	<0.03	<0.03	<0.03

Copyright © 2004 E. I. du Pont de Nemours and Company. All rights reserved.

Data Table for Tychem® Limited-Use Fabrics

Class	Sub- Class	Chemical Name	CAS	Phase	Tychem® CPF 1	Tychem® QC	Tychem® CPF 2	Tychem® SL	Tychem® CPF 3	Tychem® F	Tychem® CPF 4	Tychem® BR and Tychem® LV	Tychem® Responder®	Tychem® TK	Tychem® Reflector®
		Cyclohexylamine	108-91-8	L									>480		
													<0.1		
		Ethanolamine	141-43-5	L					>480	>480		>480	>480	>480	>480
									<0.1	<0.001		<0.1	<0.1	<0.1	<0.1
		Ethylamine (15ºC)	75-04-7	L								361	361	>480	361
												1.49	1.49	<0.02	1.49
		Ethylamine 70% w/w	75-04-7	L									>240		
													<0.1		
		Isopropylamine	75-31-0	L					15	>480		>480	>480	>480	>480
									22	<0.05		<0.01	<0.1	<0.01	<0.01
		Methylamine	74-89-5	G						>480	240	105	>480	>480	105
										<0.05	0.89	40	<0.1	<0.06	40
		Methylamine, 40% sol.	74-89-5	L					140			261	261	261	261
									8.04			1.8	1.8	1.8	1.8
		Methylamine, 50%	74-89-5	L								232	232	232	232
												2.2	2.2	2.2	2.2
		Nonylamine	112-20-9	L									>480		
													<0.1		
		n-Propylamine	107-10-8	L					100						
									1.3						
	142 Aliphatic and Alicyclic, Secondary														
		Diethanolamine	111-42-2	L					>480				>480		
									<0.1				<0.1		
		Diethylamine	109-89-7	L	imm	imm.	12	12	>480	>480	>480	>480	>480	>480	>480
					>24	64	>50	>50	<0.1	<0.001	<0.1	<0.001	<0.1	<0.1	<0.1
		Dimethylamine	124-40-3	G					>480	>480				>480	
									<0.01	<0.05				<0.05	
		Hexamethyldisilazane	999-97-3	L			>480	>480			>480	>480	>480	>480	>480
							<0.03	<0.03			<0.03	<0.02	<0.1	<0.02	<0.02
		Morpholine	110-91-8	L			153	153			153	>480	>480	>480	>480
							1.38	1.38			1.38	<0.1	<0.1	<0.1	<0.1
	143 Aliphatic and Alicyclic, Tertiary														
		Triethylamine	121-44-8	L			>480*	>480*			>480*	>480	>480	>480	>480
							<2	<2			<2	<0.1	<0.1	<0.1	<0.1
		Trimethylamine gas	75-50-3	G										>480	
														<0.1	
	145 Aromatic, Primary														
		Aniline	62-53-3	L		imm.	>480	>480	36	>480	>480	>480	>480	>480	>480
						2.1	0.09	0.09	1.1	<0.05	<0.1	<0.1	<0.1	<0.1	<0.1
		Benzidine, 25% in Methanol	92-87-5	L								>480	>480	>480	>480
												<0.01	<0.01	<0.01	<0.01

Copyright © 2004 E. I. du Pont de Nemours and Company. All rights reserved.

Data Table for Tychem® Limited-Use Fabrics

Class	Sub- Class	Chemical Name	CAS	Phase	Tychem® CPF 1	Tychem® QC	Tychem® CPF 2	Tychem® SL	Tychem® CPF 3	Tychem® F	Tychem® CPF 4	Tychem® BR and Tychem® LV	Tychem® Responder®	Tychem® TK	Tychem® Reflector®
		Benzidine, 75% in Methanol	92-87-5	L										>480	
														<0.1	
		4-Chloroaniline	106-47-8	S								>480	>480	>480	>480
												<0.09	<0.09	<0.09	<0.09
		4-Chloroaniline (70ºC)	106-47-8	L			imm.	imm.		344	imm.	344	344	344	344
							90	90		9.4	90	9.4	9.4	9.4	9.4
		3,4-Dichloroaniline	95-76-1	S								>480	>480	>480	>480
												<0.001	<0.001	<0.001	<0.001
		3,4- Dichloroaniline (70°C)	95-76-1	L			imm.	imm.			imm.	284	284	284	284
							17	17			17	2.4	2.4	2.4	2.4
		Diethyl-m-toluidine crude	91-67-8	L			>480	>480			>480		>480		
							<0.1	<0.1			<0.1		<0.1		
		4,4'-Methylene dianiline	101-77-9	L										>480	
														<0.1	
		4,4'-Methylene dianiline,15% sol'n. in MEK	101-77-9	L								>480	>480	>480	>480
												<0.1	<0.1	<0.1	<0.1
		4,4'-Methylene dianiline,15% sol'n. in water	101-77-9	L									>480		
													<0.1		
		m-Toluidine	108-44-1	L			>480	>480			>480		>480		
							<0.001	<0.001			<0.001		<0.001		
		o-Toluidine	95-53-4	L		imm.	255*	255*		>480	>480	>480	>480	>480	>480
						1	0.36	0.36		<0.001	<0.1	<0.001	<0.001	<0.001	<0.001
	146 Aromatic, Secondary and Tertiary														
		Diethylaniline crude	91-66-7	L			>480	>480			>480		>480		
							<0.1	<0.1			<0.1		<0.1		
		N,N-Dimethylaniline	121-69-7	L						>480		>480	>480	>480	>480
										<0.1		<0.013	<0.013	<0.013	<0.013
		Tripropylamine	102-69-2	L								>480	>480	>480	>480
												<0.07	<0.07	<0.07	<0.07
	148 Aliphatic and Alicyclic Polyamines														
		Diethylenetriamine	111-40-0	L						>480		>480	>480	>480	>480
										<0.05		<0.01	<0.01	<0.1	<0.01
		Ethylenediamine	107-15-3	L		201*	>480	>480		>480	>480		>480		
						2.9	<0.01	<0.01		<0.001	<0.01		<0.1		
		1,6-Hexamethylenediamine (45ºC)	124-09-4	L						>480		>480	>480	>480	>480
										<0.0001		<0.01	<0.01	<0.01	<0.01
	149 Aromatic Polyamines														
		Benzidine, 25% in Methanol	92-87-5	L								>480	>480	>480	>480
												<0.01	<0.01	<0.01	<0.01
		Benzidine, 75% in Methanol	92-87-5	L										>480	
														<0.1	

Copyright © 2004 E. I. du Pont de Nemours and Company. All rights reserved.

Data Table for Tychem® Limited-Use Fabrics

Class	Sub- Class	Chemical Name	CAS	Phase	Tychem® CPF 1	Tychem® QC	Tychem® CPF 2	Tychem® SL	Tychem® CPF 3	Tychem® F	Tychem® CPF 4	Tychem® BR and Tychem® LV	Tychem® Responder®	Tychem® TK	Tychem® Reflector®
		4,4'-Methylene bis (o-chloroaniline), sat. sol. in methanol	101-14-4	L			>480	>480			>480	>480	>480	>480	>480
							<0.1	<0.1			<0.1	<0.1	<0.1	<0.1	<0.1
		4,4'-Methylene dianiline	101-77-9	L										>480	
														<0.1	
		4,4'-Methylene dianiline, 15% sol'n. in MEK	101-77-9	L								>480	>480	>480	>480
												<0.1	<0.1	<0.1	<0.1
		4,4'-Methylene dianiline, 15% sol'n. in water	101-77-9	L									>480		
													<0.1		
160 Anhydrides															
	161 Aliphatic and Alicyclic														
		Acetic anhydride	108-24-7	L			>480	>480	>480		>480	>480	>480	>480	>480
							<0.1	<0.1	<0.1		<0.1	<0.001	<0.1	<0.001	<0.1
		Maleic anhydride, sat.	108-31-6	L									>480		
													<0.1		
210 Isocyanates															
	211 Aliphatic and Alicyclic														
		Cyclohexyl isocyanate	3173-53-3	L			>480	>480			>480		>480		
							<0.1	<0.1			<0.1		<0.1		
		Hexamethylene diisocyanate	822-06-0	L		>480	>480	>480		>480	>480	>480	>480	>480	>480
						<0.024	<0.001	<0.001		<0.07	<0.001	<0.01	<0.1	<0.01	<0.1
		Hexamethylene diisocyanate in DuPont Activator 193S	mixture	L		>480									
						<0.1									
		Hexamethylene diisocyanate in DuPont Activator 4505S	mixture	L		>480									
						<0.01									
		Hexamethylene diisocyanate in DuPont Activator 4507S	mixture	L		>480									
						<0.1									
		Isophorone diisocyanate	4098-71-9	L									>480		
													<0.1		
		Methyl isocyanate	624-83-9	L			imm.	imm.	12	imm.	imm.	>480	>480	>480	>480
							99	99	0.25	0.42	99	<0.013	<0.1	<0.013	<0.013
		Methyl isocyanate, 90%	624-83-9	L							>480				
											<0.1				
	212 Aromatic														
		4,4'-Diphenyl methane diisocyanate	101-68-8	S								>480	>480	>480	>480
												<0.07	<0.1	<0.07	<0.07
		Paraphenylene diisocyanate (PPDI) crude	104-49-4	L								>480	>480	>480	>480
												<0.1	<0.1	<0.1	<0.1
		Phenyl isocyanate	103-71-9	L							>480				
											<0.1				

Copyright © 2004 E. I. du Pont de Nemours and Company. All rights reserved.

Data Table for Tychem® Limited-Use Fabrics

Class	Sub- Class	Chemical Name	CAS	Phase	Tychem® CPF 1	Tychem® QC	Tychem® CPF 2	Tychem® SL	Tychem® CPF 3	Tychem® F	Tychem® CPF 4	Tychem® BR and Tychem® LV	Tychem® Responder®	Tychem® TK	Tychem® Reflector®
		Polymethylene polyphenylpolyisocyanate	9016-87-9	L			>480	>480		>480*	>480	>480	>480	>480	>480
							<0.01	<0.01		<0.65	<0.01	<0.1	<0.1	<0.1	<0.1
		Toluene-1,3-diisocyanate	26471-62-5	L								>480	>480	>480	>480
												<0.01	<0.01	<0.01	<0.01
		Toluene-2,4-diisocyanate	584-84-9	L		imm.	>480	>480		>480	>480	>480*	>480*	>480*	>480*
						42	<0.05	<0.05		0.037	<0.05	<0.5	<0.5	<0.5	<0.5
		Toluene-2,4-diisocyanate, 80%	584-84-9	L					>480				>480		
									<0.1				<0.1		
220 Carboxylic Esters															
	221 Formates														
		Methyl formate	107-31-3	L											>480
															<0.1
	222 Aetates														
		n-Amyl acetate	628-63-7	L						>480		>480	>480	>480	
										0.07		<0.003	<0.1	<0.003	
		n-Butyl acetate	123-86-4	L								>480	>480	>480	>480
												<0.01	<0.01	<0.01	<0.01
		Ethyl acetate	141-78-6	L	imm.	imm.	14	14	>480	>480	>480	>480	>480	>480	>480
					1.2	13	0.54	0.54	<0.1	<0.001	<0.1	<0.001	<0.1	<0.06	<0.1
		5-Norbornene-2-yl acetate	6143-29-9	L										>480	
														<0.0654	
		Vinyl acetate	108-05-4	L			82	82		>480	82	>480	>480	>480	>480
							1.45	1.45		<0.05	1.45	<0.01	<0.01	<0.01	<0.01
	223 Acrylates and Methacrylates														
		n-Butyl acrylate	141-32-2	L								51	>480	>480	51
												18.4	<0.1	<0.02	18.4
		Ethyl acrylate	140-88-5	L								14	>480	>480	14
												91	<0.1	<0.02	91
		Ethyl methacrylate	97-63-2	L									>240		
													<0.1		
		2-Hydroxyethylacrylate	818-61-1	L					>480						
									<0.1						
		Methyl acrylate	96-33-3	L						>480		>480	>480	>480	>480
										<0.02		<0.01	<0.1	<0.01	<0.01
		Methyl methacrylate	80-62-6	L			33	33		70	33	>480	>480	>480	>480
							18.1	18.1		1.55	18.1	<0.02	<0.02	<0.02	<0.02
	224 Aliphatic, Others														
		Dimethylmaleate	624-48-6	L			>480	>480			>480		>480		
							<0.1	<0.1			<0.1		<0.1		
	225 Lactones														
		Gamma-Butyrolactone	96-48-0	L							>480		>480		
											<0.1		<0.1		

Copyright © 2004 E. I. du Pont de Nemours and Company. All rights reserved.

Data Table for Tychem® Limited-Use Fabrics

Class	Sub- Class	Chemical Name	CAS	Phase	Tychem® CPF 1	Tychem® QC	Tychem® CPF 2	Tychem® SL	Tychem® CPF 3	Tychem® F	Tychem® CPF 4	Tychem® BR and Tychem® LV	Tychem® Responder®	Tychem® TK	Tychem® Reflector®
	226 Benzoates and Phthalates														
		Di (2-ethylhexyl) phthalate	117-81-7	L						>480		>480	>480	>480	>480
										<0.1		<0.07	<0.07	<0.07	<0.07
		Methyl salicylate	119-36-8	L		imm.	>480	>480			>480		>480		
						0.5	<0.01	<0.01			<0.01		<0.01		
230 Non-Carboxylic Esters															
	233 Carbamates and Others														
		Methomyl, 29%	16752-77-5	L								>480	>480	>480	>480
												<0.1	<0.1	<0.1	<0.1
240 Ethers															
	241 Aliphatic and Alicyclic														
		n-Butyl ether	142-96-1	L					>480	196	>480	>480	>480	>480	>480
									<0.1	0.2	<0.1	0.001	<0.1	0.001	<0.01
		Chloromethyl methyl ether	107-30-2	L						46	288	>480	>480	>480	>480
										0.7	0.67	0.03	<0.1	0.03	0.03
		Dichloroethyl ether	111-44-4	L						>480		>480	>480	>480	>480
										<0.02		<0.01	<0.01	<0.01	<0.01
		Dimethyl ether	115-10-6	G										>480	
														<0.07	
		Ethyl ether	60-29-7	L			imm.*	imm.*		>480	imm.*	>480	>480	>480	>480
							1.6	1.6		<0.01	1.6	<0.001	<0.001	<0.001	<0.01
		Methyl tert-butyl ether	1634-04-4	L			>480	>480	>480	>480	>480	>480	>480	>480	>480
							<0.1	<0.1	<0.1	<0.01	<0.1	<0.007	<0.007	<0.007	<0.007
		Tetrahydrofuran	109-99-9	L	imm.	imm.	imm.	imm.	>480	464	>480	>480	>480	>480	>480
					29	183	>50	>50	<0.1	0.12	<0.1	<0.001	<0.1	<0.04	<0.1
	245 Glycol Ethers														
		Butyl Cellosolve®	111-76-2	L			>480	>480			>480		>480		
							<0.003	<0.003			<0.003		<0.003		
		Ethyl Cellosolve®	110-80-5	L			>480	>480	306		>480	>480	>480	>480	>480
							<0.007	<0.007	0.29		<0.007	<0.008	<0.008	<0.008	<0.008
		Ethyl Cellosolve® acetate	111-15-9	L			39*	39*		>480	39*	>480	>480	>480	>480
							1.8	1.8		0.03	1.8	<0.002	<0.002	<0.002	<0.002
		Ethylene diglycol monoethyl ether	111-90-0	L			>480	>480			>480		>480		
							<0.07	<0.07			<0.07		<0.07		
		Methyl Cellosolve®	109-86-4	L			89	89		>480	89	>480	>480	>480	>480
							5.77	5.77		0.002	5.77	<0.01	<0.01	<0.01	<0.01
		Methyl Cellosolve® acetate	110-49-6	L			260*	260*		>480	260*	>480	>480	>480	>480
							1.1	1.1		<0.05	1.1	<0.01	<0.01	<0.01	<0.01
	246 Vinylic														
		Ethyl vinyl ether	109-92-2	L									>180		
													<0.1		

Copyright © 2004 E. I. du Pont de Nemours and Company. All rights reserved.

Data Table for Tychem® Limited-Use Fabrics

Class	Sub- Class	Chemical Name	CAS	Phase	Tychem® CPF 1	Tychem® QC	Tychem® CPF 2	Tychem® SL	Tychem® CPF 3	Tychem® F	Tychem® CPF 4	Tychem® BR and Tychem® LV	Tychem® Responder®	Tychem® TK	Tychem® Reflector®
260 Halogen Compounds															
	261 Aliphatic and Alicyclic														
		Bromochloromethane	74-97-5	L									>180		
													<0.1		
		Carbon tetrachloride	56-23-5	L						11		>480	>480	>480	>480
										0.57		<0.015	<0.1	<0.015	<0.015
		Chlordane	57-74-9	L								>480	>480	>480	>480
												<0.01	<0.01	<0.01	<0.01
		Chlordane, 44%	57-74-9	L					>480						
									<0.1						
		Chloroacetophenone	532-27-4	L									>480		
													<0.1		
		2-Chloroethanol	107-07-3	L		imm.				>480		>480	>480	>480	>480
						3.1				<0.001		<0.008	<0.008	<0.008	<0.008
		Chloroform	67-66-3	L		imm.	imm.	imm.	imm.	imm.	>480	>480	>480	>480	>480
						350	201	201	24	10	<0.1	<0.004	<0.1	<0.004	<0.004
		Chloropicrin	76-06-2	L									>480		
													<0.1		
		1,2-Dibromo-3-Chloropropane	96-12-8	L					>480						
									<0.1						
		1,3-Dichloroacetone (40ºC)	534-07-6	L						>480		>480	>480	>480	>480
										0.02		<0.1	<0.1	<0.1	<0.1
		1,2-Dichloroethane	107-06-2	L			imm.	imm.	>480	118	>480	>480	>480	>480	>480
							2	2	<0.1	7.2	<0.1	<0.002	<0.1	<0.002	<0.002
		Dichloroethyl ether	111-44-4	L						>480		>480	>480	>480	>480
										<0.02		<0.01	<0.01	<0.01	<0.01
		Dichloromethane	75-09-2	L	imm	imm.	imm.	imm.	imm.	imm.	114	432	>480	>480	>480
					>10	>50	>50	>50	>11.0	8	2.4	0.06	<0.1	<0.03	<0.1
		1,3-Dichloropropene	542-75-6	L			imm.	imm.	imm.	25	imm.		>480		
							127	127	103	1.6	127		<0.1		
		2,3-Dichloropropene	78-88-6	L						25		>480	>480	>480	>480
										2.4		<0.008	<0.008	<0.008	<0.008
		1,1-Dichlorotetrafluoroethane	374-07-2	L			>480	>480			>480		>480		
							<0.1	<0.1			<0.1		<0.1		
		1,4-Diiodo-1,1,2,2-Tetrafluorobutane	755-95-3	L				180	180		180	>480	>480	>480	>480
								45	45		45	<0.26	<0.26	<0.26	<0.26
		Ethyl chloride	75-00-3	L										>480	
														<0.02	
		Ethylene dibromide	106-93-4	L						288		>480	>480	>480	>480
										0.52		<0.1	<0.1	<0.1	<0.1
		Ethylene oxide, 10% in HCFC 124	mixture	G										>480	
														<0.02	

Copyright © 2004 E. I. du Pont de Nemours and Company. All rights reserved.

Data Table for Tychem® Limited-Use Fabrics

Class	Sub- Class	Chemical Name	CAS	Phase	Tychem® CPF 1	Tychem® QC	Tychem® CPF 2	Tychem® SL	Tychem® CPF 3	Tychem® F	Tychem® CPF 4	Tychem® BR and Tychem® LV	Tychem® Responder®	Tychem® TK	Tychem® Reflector®
		Ethyl vinyl ether	109-92-2	L									>180		
													<0.1		
		Hexafluoroethane	76-16-4	G								>480	>480	>480	>480
												<0.02	<0.02	<0.02	<0.02
		Hexafluoroisobutylene	382-10-5	G								>480	>480	>480	>480
												<0.01	<0.01	<0.01	<0.01
		Lindane, sat. sol. in acetone	58-89-9	L								>480	>480	>480	>480
												<0.06	<0.06	<0.06	<0.06
		Lindane, sat. sol. in methanol	58-89-9	L										>480	
														<0.1	
		Methyl bromide	74-83-9	G			>480	>480			>480	>480	>480	>480	>480
							<0.1	<0.1			<0.1	<0.01	<0.1	<0.01	<0.01
		Methyl chloride	74-87-3	G		imm.	>480	>480	>480	>480	>480	>480	>480	>480	>480
						0.23	<0.006	<0.006	<0.01	<0.004	<0.006	<0.001	<0.1	<0.02	<0.1
		Methyl chloride (-70ºC)	74-87-3	L										>180	
														<0.05	
		Methyl fluoride	593-53-3	G								>480	>480	>480	>480
												<0.02	<0.1	<0.02	<0.02
		Methyl iodide	74-88-4	L			imm.	imm.			imm.	>480	>480	>480	>480
							342	342			342	<0.01	<0.1	<0.01	<0.01
		Methylene Bromide	74-95-3	L						imm.					
										11					
		Propylene dichloride	78-87-5	L			73	73			73	>480	>480	>480	>480
							3.2	3.2			3.2	<0.01	<0.01	<0.01	<0.01
		Tetrabromoethane	79-27-6	L									>480		
													<0.1		
		1,1,2,2-Tetrachloroethane	79-34-5	L			75*	75*			75*	>480	>480	>480	>480
							12	12			12	0.0005	0.0005	0.0005	0.0005
		1,1,1,2-Tetrafluoroethane	811-97-2	L			>480	>480			>480		>480		
							<0.1	<0.1			<0.1		<0.1		
		Tetrafluoromethane	75-73-0	G								>480	>480	>480	>480
												<0.018	<0.018	<0.0177	<0.018
		1,1,3-Trichloroacetone	921-03-9	L						>480					
										<0.05					
		1,1,1-Trichloroethane	71-55-6	L					>480	232	>480	>480	>480	>480	>480
									<0.1	9.1	<0.1	<0.004	<0.1	<0.004	<0.004
		1,1,2-Trichloroethane	79-00-5	L								>480	>480	>480	>480
												<0.01	<0.01	<0.01	<0.01
		1,1,2-Trichloro-1,2,2-trifluoroethane	76-13-1	G					>480			>480	>480	>480	>480
									<0.1			<0.01	<0.1	<0.01	<0.01
		Trichloronitromethane	76-06-2	L						>480					
										<0.1					

Copyright © 2004 E. I. du Pont de Nemours and Company. All rights reserved.

Data Table for Tychem® Limited-Use Fabrics

Class	Sub- Class	Chemical Name	CAS	Phase	Tychem® CPF 1	Tychem® QC	Tychem® CPF 2	Tychem® SL	Tychem® CPF 3	Tychem® F	Tychem® CPF 4	Tychem® BR and Tychem® LV	Tychem® Responder®	Tychem® TK	Tychem® Reflector®
		Trifluoroacetic acid	76-05-1	L			>480	>480		>480	>480		>480		
							<0.1	<0.1		<0.01	<0.1		<0.1		
		Trifluoromethane	75-46-7	G								>480	>480	>480	>480
												<0.014	<0.014	<0.014	<0.014
	263 Aromatic														
		Benzotrichloride	98-07-7	L					>480						
									<.002						
		4-Bromofluorobenzene	460-00-4	L						>480		>480	>480	>480	>480
										<0.02		<0.001	<0.001	<0.001	<0.001
		Chlorobenzene	108-90-7	L			imm.	imm.	63	>480	>480	>480	>480	>480	>480
							5.4	5.4	0.7	<0.1	<0.1	<0.001	<0.1	<0.001	<0.001
		4-Chlorobenzotrichloride	5216-25-1	L					>480						
									0.034						
		4-Chlorobenzotrifluoride	98-56-6	L					460						
									0.1						
		4-Chlorophenol, sat. sol. in methanol	106-48-9	L								>480	>480	>480	>480
												<0.013	<0.013	<0.013	<0.013
		o-Chlorotoluene	95-49-8	L			26*	26*		>480	26*	>480	>480	>480	>480
							26	26		0.02	26	<0.001	<0.001	<0.001	<0.001
		Cyanuric chloride 20%, Toluene 80%	Mixture	L								>480	>480	>480	>480
												<0.1	<0.1	<0.1	<0.1
		3,4-Dichloroaniline	95-76-1	S								>480	>480	>480	>480
												<0.001	<0.001	<0.001	<0.001
		3,4-Dichloroaniline (70°C)	95-76-1	L			imm.	imm.			imm.	284	284	284	284
							17	17			17	2.4	2.4	2.4	2.4
		Fluorobenzene	462-06-6	L			imm.	imm.		>480	imm.	>480	>480	>480	>480
							>500	>500		<0.1	>500	<0.1	<0.1	<0.1	<0.1
		o-Nitrochlorobenzene	88-73-3	S		15	237	237			237		237		
						4.1	0.61	0.61			0.61		0.61		
		o-Nitrochlorobenzene (35ºC)	88-73-3	L			80	80			80		80		
							2.4	2.4			2.4		2.4		
		p-Nitrochlorobenzene	100-00-5	S		imm.	476	476			476		476		
						2.3	0.11	0.11			0.11		0.11		
		p-Nitrochlorobenzene (85ºC)	100-00-5	L			321	321			321		321		
							1.5	1.5			1.5		1.5		
		PCB 1254	11097-69-1	L		55	>480*	>480*			>480*		>480*		
						>3.6	<0.2	<0.2			<0.2		<0.2		
		PCB gas condensate	mixture	L			401	401		>480	401		401		
							0.36	0.36		<0.001	0.36		0.36		
		PCB in transformer oil	mixture	L						>480			>240		
										<0.001			<0.1		
		PCB 50%, Mineral oil 50%	mixture	L			>480*	>480*			>480*		>480*		
							nd	nd			nd		nd		

Copyright © 2004 E. I. du Pont de Nemours and Company. All rights reserved.

Data Table for Tychem® Limited-Use Fabrics

Class	Sub- Class	Chemical Name	CAS	Phase	Tychem® CPF 1	Tychem® QC	Tychem® CPF 2	Tychem® SL	Tychem® CPF 3	Tychem® F	Tychem® CPF 4	Tychem® BR and Tychem® LV	Tychem® Responder®	Tychem® TK	Tychem® Reflector®
		PCB 1%, Mineral spirits 99%	mixture	L			>480*	>480*			>480*		>480*		
							nd	nd			nd		nd		
		PCB 4%, TCB 6%, Mineral spirits 90%	mixture	L			60*	60*			60*		60*		
							0.04	0.04			0.04		0.04		
		Toluene 80%, Dichlorotriazine 20%	mixture	L					>480						
									<0.1						
		2,2',6,6' Tetrachlorobisphenol A	79-95-8	S						>480					
										<0.1					
		PCB 50%, Trichlorobenzene 50%	mixture	L			>480	>480	>480		>480	>480	>480	>480	>480
							<0.1	<0.1	<0.1		<0.1	<0.001	<0.001	<0.001	<0.001
		1,2,4-Trichlorobenzene	120-82-1	L		imm.	113	113		>480	113	>480	>480	>480	>480
						8.4	1.2	1.2		<0.001	1.2	<0.01	<0.01	<0.01	<0.01
	264 Vinylic														
		2-Chloroacrylonitrile	920-37-6	L									>480		
													<0.1		
		2-Chloro-1,3- Butadiene	126-99-8	L									>480		
													<0.1		
		trans-1,4-Dichloro-2-butene	110-57-6	L		75*									
						246									
		1,4- Dichloro-2-butene, 85%	764-41-0	L									>480		
													<0.1		
		trans-1,2-Dichloroethylene	156-60-5	L			imm.	imm.			imm.		>180		
							306	306			306		<0.1		
		1,3- Hexachlorobutadiene	87-68-3	L								>480	>480	>480	>480
												<0.01	<0.1	<0.01	<0.01
		Hexachlorocyclopentadiene	77-47-4	L									>480		
													<0.1		
		1,1,1-3,3,3-Hexachloropropane	3607-78-1	L			>480	>480			>480		>480		
							<0.1	<0.1			<0.1		<0.1		
		1,1,2,2-Tetrachloroethylene	127-18-4	L	imm.	imm.	imm.	imm.	>480	>480	>480	>480	>480	>480	>480
					>10	high	5.7	5.7	<0.1	<0.022	<0.1	<0.001	<0.1	<0.01	<0.1
		Trichloroethylene	79-01-6	L			imm.	imm.		>480	imm.	>480	>480	>480	>480
							>35	>35		<0.01	>35	<0.1	<0.1	<0.1	<0.1
		Vinyl bromide	593-60-2	L									>480		
													<0.1		
		Vinyl chloride	75-01-4	G			>480	>480	>480	>480	>480	>480	>480	>480	>480
							<0.1	<0.1	<0.1	<0.02	<0.1	<0.001	<0.1	<0.001	<0.1
		Vinylidene chloride	75-35-4	L						>480		>480	>480	>480	>480
										<0.02		<0.01	<0.01	<0.01	<0.01
	265 Alylic														
		Allyl chloride	107-05-1	L			imm.	imm.	12	>480	>480	>480	>480	>480	>480
							18.5	18.5	1.2	<0.1	<0.1	<0.06	<0.06	<0.06	<0.06
	266 Benzylic														
		Benzyl chloride	100-44-7	L					>480	>480		>480	>480	>480	>480
									<0.08	<0.05		<0.01	<0.1	<0.01	<0.01

Copyright © 2004 E. I. du Pont de Nemours and Company. All rights reserved.

Data Table for Tychem® Limited-Use Fabrics

Class	Sub- Class	Chemical Name	CAS	Phase	Tychem® CPF 1	Tychem® QC	Tychem® CPF 2	Tychem® SL	Tychem® CPF 3	Tychem® F	Tychem® CPF 4	Tychem® BR and Tychem® LV	Tychem® Responder®	Tychem® TK	Tychem® Reflector®
270 Heterocyclic Compounds															
	271 Nitrogen, Pyridines														
		2-Aminopyridine	504-29-0	L			321	321			321		321		
							112	112			112		112		
		Nicotine	54-11-5	L			>480	>480	>480	>480	>480	>480	>480	>480	>480
							<0.035	<0.035	<0.1	<0.1	<0.035	<0.1	<0.1	<0.1	<0.1
		2-Picoline	109-06-8	L						>480		46	46	>480	46
										<0.05		48	48	<0.02	48
		3-Picoline	108-99-6	L								11	11	>480	11
												22	22	<0.01	22
		Pyridine	110-86-1	L			17	17		>480	17	>480	>480	>480	>480
							34	34		<0.05	34	<0.01	<0.1	<0.01	<0.01
		4-Vinylpyridine	100-43-6	L			64	64			64		64		
							7.3	7.3			7.3		7.3		
	274 Nitrogen, Others														
		2,4-Dichloro-6-isopropyl-S-triazine 22%,Toluene 78%	mixture	L								>480	>480	>480	>480
												<0.1	<0.1	<0.1	<0.1
		Ethyleneimine	151-56-4	L								59	357	>480	59
												0.56	0.032	<0.01	0.56
		Pyrrolidine	123-75-1	L						100		413	413	413	413
										4.7		9.2	9.2	9.2	9.2
	275 Oxygen, Epoxides														
		Bisphenol-A diglycidyl ether	1675-54-3	L			>480	>480		>480	>480	>480	>480	>480	>480
							<0.01	<0.01		<0.01	<0.01	<0.01	<0.01	<0.01	<0.01
		1,2-Butylene oxide	106-88-7	L									>240		
													<0.1		
		Epichlorohydrin	106-89-8	L			57*	57*	67	372	>480	>480	>480	>480	>480
							>50	>50	2.1	0.51	<0.1	<0.014	<0.014	<0.014	<0.014
		Ethylene oxide, 10% in HCFC 124	mixture	G										>480	
														<0.02	
		Ethylene oxide gas	75-21-8	G		imm.	imm.	imm.	>480	65	305	>480	>480	>480	>480
						167	8.4	8.4	<0.01	1.4	1.08	<0.01	<0.1	<0.1	<0.1
		Ethylene oxide liquid (0ºC)	75-21-8	L								>480	>480	>480	>480
												<0.01	<0.01	<0.01	<0.01
		Ethylene oxide liquid (11ºC)	75-21-8	L					18		>480		>180		
									0.22		<0.1		<0.1		
		Ethylene oxide liquid (-70ºC)	75-21-8	L										>180	
														<0.02	
		Phenyl glicydyl ether	122-60-1	L			>480	>480			>480		>480		
							<0.1	<0.1			<0.1		<0.1		
		1,2-Propylene oxide	75-56-9	L					30	14	>480	>480	>480	>480	>480
									1.37	1.02	<0.1	<0.002	<0.1	<0.002	<0.002
		Tetramethylethylene Oxide	5076-20-0	L										>480	
														<0.047	

Copyright © 2004 E. I. du Pont de Nemours and Company. All rights reserved.

Data Table for Tychem® Limited-Use Fabrics

Class	Sub- Class	Chemical Name	CAS	Phase	Tychem® CPF 1	Tychem® QC	Tychem® CPF 2	Tychem® SL	Tychem® CPF 3	Tychem® F	Tychem® CPF 4	Tychem® BR and Tychem® LV	Tychem® Responder®	Tychem® TK	Tychem® Reflector®
	277 Oxygen, Furans														
		2-Furaldehyde	98-01-1	L			245*	245*	>480	>480	245*	>480	>480	>480	>480
							0.2	0.2	<0.1	0.01	0.2	<0.01	<0.01	<0.01	<0.01
	278 Oxygen, Others														
		1,4-Dioxane	123-91-1	L						>480		>480	>480	>480	>480
										0.001		<0.05	<0.05	<0.05	<0.05
280 Hydrazines															
		1,1-Dimethylhydrazine	57-14-7	L			12*	12*			12*	>480*	>480	>480*	>480*
							6	6			6	<5.0	<0.1	<5.0	<5.0
		Hydrazine	302-01-2	L			437	437		283	>480	>480	>480	>480	>480
							0.2	0.2		1.6	<0.1	<0.05	<0.1	<0.05	<0.05
		Hydrazine hydrate	10217-52-4	L									>480		>480
													<0.1		<0.01
		Hydrazine hydrate, 50%	10217-52-4	L										>480	
														<0.06	
		Hydrazine hydrate, 85%	10217-52-4	L								440	440	440	440
												0.06	0.06	0.06	0.06
		Methylhydrazine	60-34-4	L						283		>480	>480	>480	>480
										0.98		<0.01	<0.1	<0.01	<0.01
290 Hydrocarbons															
	291 Aliphatic and Alicyclic, Saturated														
		Cyclohexane	110-82-7	L						>480		>480	>480	>480	>480
										0.04		<0.003	<0.1	<0.003	<0.003
		Diesel fuel	68334-30-5	L			48	48		>480	48	>480	>480	>480	>480
							0.5	0.5		<0.001	0.5	<0.03	<0.1	<0.03	<0.03
		Diesel automotive test fuel	mixture	L		imm.	>480	>480			>480		>480		
						1.8	<0.01	<0.01			<0.01		<0.01		
		Fuel oil	mixture	L		imm.	>480	>480			>480		>480		
						1.8	<0.01	<0.01			<0.01		<0.01		
		Gasoline (mixture)	86290-81-5	L					>480						
									<0.1						
		Gasoline, leaded	86290-81-5	L						30		>480*	>480*	>480*	>480*
										0.32		nd	nd	nd	nd
		Gasoline, Unleaded	86290-81-5	L			imm.	imm.		>480	imm.	>480	>480	>480	>480
							4.8	4.8		<0.001	4.8	<0.001	<0.001	<0.001	<0.001
		Heptane	142-82-5	L					>480						
									<0.1						
		n-Hexane	110-54-3	L	imm.	imm.	10	10	>480	>480	>480	>480	>480	>480	>480
					17	high	0.28	0.28	<0.1	<0.001	<0.1	<0.001	<0.1	<0.01	<0.1
		Isobutane	75-28-5	L									>480		
													<0.1		
		JP-4 jet fuel	Mixture	L			18	18			18	>480	>480	>480	>480
							24	24			24	<0.002	<0.002	<0.002	<0.002

Copyright © 2004 E. I. du Pont de Nemours and Company. All rights reserved.

Data Table for Tychem® Limited-Use Fabrics

Class	Sub- Class	Chemical Name	CAS	Phase	Tychem® CPF 1	Tychem® QC	Tychem® CPF 2	Tychem® SL	Tychem® CPF 3	Tychem® F	Tychem® CPF 4	Tychem® BR and Tychem® LV	Tychem® Responder®	Tychem® TK	Tychem® Reflector®
		Jet A fuel	8008-20-6	L			58	58			58	>480	>480	>480	>480
							0.59	0.59			0.59	<0.1	<0.1	<0.1	<0.1
		JP-8 jet fuel	8008-20-6	L			58	58			58	>480	>480	>480	>480
							0.59	0.59			0.59	<0.1	<0.1	<0.1	<0.1
		Kerosene	8008-20-6	L			58	58		>480	58	>480	>480	>480	>480
							0.59	0.59		<0.1	0.59	<0.1	<0.1	<0.1	<0.1
		Methane	74-82-8	G									>480		
													<0.1		
		Mineral oil	8012-95-1	L			>480	>480			>480		>480		
							<0.08	<0.08			<0.08		<0.1		
		Mineral spirits	64475-85-0	L		imm.	>480*	>480*			>480*	>480	>480	>480	>480
						nm	nd	nd			nd	<0.01	<0.01	<0.01	<0.01
		n-Octane	111-65-9	L								>480	>480	>480	>480
												<0.01	<0.1	<0.01	<0.01
		Propane	74-98-6	G									>480		>480
													<0.1		<0.01
		Stoddard solvent	8052-41-3	L							>480	>480	>480	>480	>480
											<0.1	<0.001	<0.001	<0.001	<0.001
		VM&P Naphtha	8032-32-4	L			18	18			18	>480	>480	>480	>480
							1.3	1.3			1.3	<0.006	<0.006	<0.006	<0.006
	292 Aromatic														
		Benzene	71-43-2	L			36	36	>480	>480	>480	>480	>480	>480	>480
							11.3	11.3	<0.1	<0.05	<0.1	<0.001	<0.1	<0.001	<0.001
		Benzo[a]pyrene	50-32-8	S			>480*	>480*			>480*		>480*		
							<0.8	<0.8			<0.8		<0.8		
		Cumene	98-82-8	L						>480	>480	>480	>480	>480	>480
										0.05	<0.1	<0.01	<0.01	<0.01	<0.01
		Ethyl benzene	100-41-4	L							>480	>480	>480	>480	>480
											<0.1	<0.001	<0.1	<0.001	<0.001
		Isobutylbenzene	538-93-2	L									>480		
													<0.1		
		1,2,3-Trimethylbenzene, 90%	526-73-8	L									>480		
													<0.1		
		Styrene	100-42-5	L			12	12	>480	>480	>480	>480	>480	>480	>480
							75	75	<0.1	<0.04	<0.1	<0.001	<0.001	<0.001	<0.001
		Tetralone	529-34-0	L									>480		
													<0.1		
		Toluene	108-88-3	L	imm.	imm.	imm.	imm.	>480	>480	>480	>480	>480	>480	>480
					64	503	39	39	<0.1	0.003	<0.1	<0.001	<0.1	<0.02	<0.1
		Xylene, mixed isomers	1330-20-7	L						291	>480	>480	>480	>480	>480
										0.12	<0.1	<0.004	<0.004	<0.004	<0.004
		o-Xylene	95-47-6	L					>480						
									<0.1						

Copyright © 2004 E. I. du Pont de Nemours and Company. All rights reserved.

Data Table for Tychem® Limited-Use Fabrics

Class	Sub- Class	Chemical Name	CAS	Phase	Tychem® CPF 1	Tychem® QC	Tychem® CPF 2	Tychem® SL	Tychem® CPF 3	Tychem® F	Tychem® CPF 4	Tychem® BR and Tychem® LV	Tychem® Responder®	Tychem® TK	Tychem® Reflector®
	293 Aromatic Polynuclear														
		Anthracene, sat. sol. in toluene	120-12-7	L						>480					
										<0.01					
		Benzo[a]pyrene	50-32-8	S			>480*	>480*			>480*		>480*		
							<0.8	<0.8			<0.8		<0.8		
		Naphthalene	91-20-3	L					>480						
									<0.1						
		Naphthalene	91-20-3	S						>480					
										<0.001					
		Naphthalene, sat. sol. in toluene	91-20-3	L											
	294 Aliphatic and Alicyclic, Unsaturated														
		Crude oil	8002-05-9	L		imm.	>480	>480			>480	>480	>480	>480	>480
						3.3	<0.01	<0.01			<0.01	<0.04	<0.04	<0.04	<0.04
		Ethylene	74-85-1	G									>480		
													<0.1		
		1-Hexene	592-41-6	L									>480		
													<0.1		
		Turpentine	8006-64-2	L									>480		
													<0.1		
	296 Polyenes														
		1,3-Butadiene	106-99-0	G		imm.	>480	>480	>480	>480	>480	>480	>480	>480	>480
						12	<0.02	<0.02	<0.1	0.07	<0.02	<0.001	<0.1	<0.07	<0.1
		1,3-Butadiene (0°C)	106-99-0	L										>180	
														<0.01	
		Cyclooctadiene	1552-12-1	L					>480						
									<0.01						
		Isoprene	78-79-5	L									>180		
													<0.1		
		d-Limonene	5989-27-5	L						>480		>480	>480	>480	>480
										<0.02		<0.001	<0.001	<0.001	<0.001
300 Peroxides															
		Ethyl benzene hydroperoxide	3071-32-7	L							>480				
											<0.1				
		Hydrogen peroxide, 30%	7722-84-1	L		>480	>480	>480			>480		>480	>480	
						<0.1	<0.1	<0.1			<0.1		<0.1	<0.04	
		Hydrogen peroxide, 50%	7722-84-1	L					>480						
									<.002						
		Hydrogen peroxide, 70%	7722-84-1	L		>480						>480	>480	>480	>480
						<0.01						<0.01	<0.1	<0.01	<0.01

Copyright © 2004 E. I. du Pont de Nemours and Company. All rights reserved.

Data Table for Tychem® Limited-Use Fabrics

Class	Sub- Class	Chemical Name	CAS	Phase	Tychem® CPF 1	Tychem® QC	Tychem® CPF 2	Tychem® SL	Tychem® CPF 3	Tychem® F	Tychem® CPF 4	Tychem® BR and Tychem® LV	Tychem® Responder®	Tychem® TK	Tychem® Reflector®
310 Hydroxylic Compounds															
	311 Aliphatic and Alicyclic, Primary														
		Allyl alcohol	107-18-6	L						>480	>480	>480	>480	>480	>480
										0.04	<0.1	<0.1	<0.1	<0.1	<0.1
		n-Butanol	71-36-3	L		imm.	>480	>480	>480	>480	>480	>480	>480	>480	>480
						1.6	<0.001	<0.001	<0.1	<0.05	<0.001	<0.002	<0.1	<0.002	<0.002
		Ethanol	64-17-5	L					>480		>480				
									<0.01		<0.1				
		Ethanolamine	141-43-5	L					>480	>480		>480	>480	>480	>480
									<0.1	<0.001		<0.1	<0.1	<0.1	<0.1
		Isobutanol	78-83-1	L									>480		
													<0.1		
		Methanol	67-56-1	L	imm.	imm.	>480	>480	imm.	77	>480	157	>480	>480	>480
					0.59	2.2	<0.1	<0.1	0.98	0.26	<0.1	0.81	<0.1	<0.1	<0.1
		Methyl Cellosolve®	109-86-4	L			89	89		>480	89	>480	>480	>480	>480
							5.77	5.77		0.002	5.77	<0.01	<0.01	<0.01	<0.01
		n-Propanol	71-23-8	L							>480				
											<0.1				
	312 Aliphatic and Alicyclic,Secondary														
		Benzyl alcohol	100-51-6	L			>480	>480			>480		>480		
							<0.1	<0.1			<0.1		<0.1		
		Isoamyl alcohol	123-51-3	L			>480	>480			>480		>480		
							<0.1	<0.1			<0.1		<0.1		
		Isopropanol	67-63-0	L					>480	>480	>480		>480		
									<0.1	<0.001	<0.1		<0.1		
	313 Aliphatic and Alicyclic, Tertiary														
		Acetone cyanohydrin	75-86-5	L						>480		>480	>480	>480	>480
										0.05		<0.01	<0.01	<0.01	<0.01
		tert-Butyl alcohol	75-65-0	L							>480		>480		
											<0.1		<0.1		
	314 Aliphatic and Alicyclic, Polyols														
		1,4-Butanediol	110-63-4	L							>480				
											<0.1				
		Ethylene glycol	107-21-1	L	>480	>480	>480*	>480*		>480	>480*	>480	>480	>480	>480
					<0.1	<0.1	<0.33	<0.33		<0.001	<0.33	<0.02	<0.02	<0.02	<0.02
		Glycerine	56-81-5	L							>480				
											<0.1				
		2-Methyl-1,3-propanediol	2163-42-0	L							>480				
											<0.1				
		Propylene glycol	57-55-6	L							>480				
											<0.1				

Copyright © 2004 E. I. du Pont de Nemours and Company. All rights reserved.

Data Table for Tychem® Limited-Use Fabrics

Class	Sub- Class	Chemical Name	CAS	Phase	Tychem® CPF 1	Tychem® QC	Tychem® CPF 2	Tychem® SL	Tychem® CPF 3	Tychem® F	Tychem® CPF 4	Tychem® BR and Tychem® LV	Tychem® Responder®	Tychem® TK	Tychem® Reflector®
	315 Aliphatic and Alicyclic, Substituted														
		2-Chloroethanol	107-07-3	L		imm.				>480		>480	>480	>480	>480
						3.1				<0.001		<0.008	<0.008	<0.008	<0.008
		2,2,2-Trichloroethanol	115-20-8	L			19*	19*		>480	19*	>480	>480	>480	>480
							13.2	13.2		<0.02	13.2	<0.01	<0.01	<0.01	<0.01
		2,2,2-Trifluoroethanol	75-89-8	L		imm.						>480	>480	>480	>480
						high						<0.001	<0.001	<0.001	<0.001
	316 Aromatic, Phenols														
		4-tert-Butyl catechol	98-29-3	L							>480				
											<0.1				
		4-Chlorophenol, sat. sol. in methanol	106-48-9	L								>480	>480	>480	>480
												<0.013	<0.013	<0.013	<0.013
		Creosote	8001-58-9	L						>480					
										<0.001					
		m-Cresol 55%, p-Cresol 30%, Phenol 15%	mixture	L								>480	>480	>480	>480
												<0.09	<0.09	<0.09	<0.09
		Cresol, mixed isomers	1319-77-3	L		40*	69	69			69	>480	>480	>480	>480
						0.4	8	8			8	<0.01	<0.1	<0.01	<0.01
		o-Cresol	95-48-7	L		37	>480	>480	330	180	>480		>480		
						0.43	0.17	0.17	1.35	2.7	0.17		0.17		
		4,6-Dinitro-o-cresol, 90+%	534-52-1	L							>480				
											<0.1				
		4,6-Dinitro-o-cresol, sat. sol. in methanol	534-52-1	L								>480	>480	>480	>480
												<0.013	<0.013	<0.013	<0.013
		2-Nitrophenol (70ºC)	88-75-5	L			imm.	imm.			imm.	208	208	208	208
							4.53	4.53			4.53	0.17	0.17	0.17	0.17
		Pentachlorophenol, sat. sol. in methanol	87-86-5	L								>480	>480	>480	>480
												<0.013	<0.013	<0.013	<0.013
		Phenol	108-95-2	L								>480	>480	>480	>480
												<0.03	<0.03	<0.07	<0.03
		Phenol, 85%-90%	108-95-2	L		imm.	>480	>480	85	238	>480		>480	>480	>480
						0.4	<0.1	<0.1	1.5	4	<0.1		<0.1	<0.07	<0.01
		Phenol, 88% (45ºC)	108-95-2	L			303	303			303	135	303	150	135
							0.91	0.91			0.91	2.26	0.91	2.8	2.26
		2,2',6,6' Tetrachlorobisphenol A	79-95-8	S						>480					
										<0.1					
		2,4,6-Tribromophenol	118-79-6	L									15		
													4.93		
	318 Aromatic, Others														
		1-Phenylethanol	98-85-1	L			>480	>480	>480				>480		
							<0.1	<0.1	<0.01				<0.1		
		2-Phenylethanol	60-12-8	L					>480		>480		>480		
									<0.01		<0.1		<0.1		

Copyright © 2004 E. I. du Pont de Nemours and Company. All rights reserved.

Data Table for Tychem® Limited-Use Fabrics

Class	Sub- Class	Chemical Name	CAS	Phase	Tychem® CPF 1	Tychem® QC	Tychem® CPF 2	Tychem® SL	Tychem® CPF 3	Tychem® F	Tychem® CPF 4	Tychem® BR and Tychem® LV	Tychem® Responder®	Tychem® TK	Tychem® Reflector®
330 Elements															
		Bromine	7726-95-6	L		imm.				imm.		imm.	18	15	imm.
						high				105		>50	533	25	30
		Bromine, 10 gm/m^2 exposure	7726-95-6	L										>480	
														<0.1	
		Bromine, sat. vapor	7726-95-6	G										40	
														>0.6	
		Chlorine, 20 ppm	7782-50-5	G		>480*	>480*	>480*			>480*		>480*		
						nd	nd	nd			nd		nd		
		Chlorine gas	7782-50-5	G		imm.	>480	>480	>480	>480*	>480	>480	>480	>480	>480
						>50	<0.1	<0.1	<0.1	0.2	<0.1	<0.01	<0.1	<0.02	<0.1
		Chlorine liquid (-70ºC)	7782-50-5	L					>480		>480		>480	>480	>480
									<0.01		<0.01		<0.1	<0.01	<0.01
		Iodine	7553-56-2	S		440*	>480*	>480*			>480*		>480*		
						30	<70	<70			<70		<70		
		Mercury	7439-97-6	L			>480	>480	>480	>480	>480	>480	>480	>480	>480
							<0.1	<0.1	<0.0009	<0.04	<0.1	<0.001	<0.1	<0.001	<0.001
340 Inorganic Salts (Solutions)															
		Aluminum sulfate hydrate, 27% sol.	17927-65-0	L									>480		
													<0.1		
		Ammonium chloride, sat.	12125-02-9	L					>480						
									<0.1						
		Ammonium fluoride, 40%	12125-01-8	L								>480	>480	>480	>480
												<0.01	<0.01	<0.01	<0.01
		Arsenic Trichloride	7784-42-1	L						38					
										334.1					
		Calcium chloride, 42%	10043-52-4	L									>240		
													<0.1		
		Ferric chloride, sat.	7705-08-0	L									>480		
													<0.1		
		Ferrous chloride, sat.	7758-94-3	L									>480		
													<0.1		
		Lithium chloride, 20%	7447-41-8	L		>480									
						<0.1									
		Mercuric chloride, sat. sol. in water	7487-94-7	L			>480*	>480*		>480	>480*	>480*	>480*	>480*	>480*
							<0.28	<0.28		<0.1	<0.28	<0.28	<0.28	<0.28	<0.28
		Potassium acetate, sat. sol. in water	127-08-2	L			>480*	>480*			>480*	>480*	>480*	>480*	>480*
							<0.51	<0.51			<0.51	<0.49	<0.49	<0.49	<0.49
		Potassium carbonate	584-08-7	L					>480						
									<0.1						
		Potassium chromate, sat. sol.in water	7789-00-6	L			>480*	>480*		>480	>480*	>480*	>480*	>480*	>480*
							<0.51	<0.51		<0.1	<0.51	<0.51	<0.51	<0.51	<0.51
		Potassium permanganate	7722-64-7	L		>480							>480		
						<0.1							<0.1		

Copyright © 2004 E. I. du Pont de Nemours and Company. All rights reserved.

Data Table for Tychem® Limited-Use Fabrics

Class	Sub- Class	Chemical Name	CAS	Phase	Tychem® CPF 1	Tychem® QC	Tychem® CPF 2	Tychem® SL	Tychem® CPF 3	Tychem® F	Tychem® CPF 4	Tychem® BR and Tychem® LV	Tychem® Responder®	Tychem® TK	Tychem® Reflector®
		Sodium dichromate, 0.5%	10588-01-9	L									>480		
													<0.1		
		Sodium fluoride, sat. sol. in water	7681-49-4	L			>480*	>480*			>480*				
							<0.28	<0.28			<0.28				
		Sodium hydrosulfide, sat.	16721-80-5	L									>480		
													<0.1		
		Sodium hypochlorite, 13%	7681-52-9	L			>480	>480	>480		>480				
							<0.1	<0.1	<0.1		<0.1				
		Sodium hypochlorite, 17%	7681-52-9	L		>480	>480	>480			>480				
						<0.1	<0.1	<0.1			<0.1				
		Sodium hypochlorite, 30% chlorine	7681-52-9	L						>480					
										<0.1					
		Sodium hypochlorite, 5.25%	7681-52-9	L		>480	>480	>480			>480		>480		
						<0.1	<0.1	<0.1			<0.1		<0.1		
345 Inorganic Cyano Compounds															
		Hydrogen cyanide gas	74-90-8	G					30		>480	>480	>480	>480	>480
									1.06		<0.1	<0.02	<0.1	<0.01	<0.05
		Hydrogen cyanide liquid	74-90-8	L		60*						105	105	>480	105
						0.11						1.7	1.7	<0.01	1.7
		Potassium cyanide	151-50-8	L											
		Potassium cyanide, 10%	151-50-8	L		>480									
						<0.1									
		Sodium cyanide	143-33-9	L					15			>480*	>480*	>480*	>480*
									2.2			<0.33	<0.33	<0.33	<0.33
		Sodium cyanide, 45%	143-33-9	L						>480			>480		
										<0.1			<0.1		
		Sodium cyanide, sat. sol. in water	143-33-9	L			>480	>480			>480		>480		
							<0.1	<0.1			<0.1		<0.1		
350 Inorganic Gases and Vapors															
		Ammonia gas	7664-41-7	G		imm.	32	32	12	79	>480	46	>480	>480	>480
						3.1	0.15	0.15	1.4	0.76	<0.1	0.62	<0.1	<0.1	<0.1
		Ammonia liquid	7664-41-7	L			>480	>480	>480		>480		>480	>480	>480
							<0.1	<0.1	<0.1		<0.01		<0.1	<0.1	<0.07
		Arsine	7784-42-1	G								>480	>480	>480	>480
												<0.01	<0.01	<0.01	<0.01
		Boron trichloride	10294-34-5	G								>480	>480	>480	>480
												<0.02	<0.1	<0.02	<0.02
		Boron trifluoride	7637-07-2	G								>480	>480	>480	>480
												<0.1	<0.1	<0.1	<0.1
		Carbon monoxide	630-08-0	G								330	330	330	330
												0.1	0.1	0.1	0.1

Copyright © 2004 E. I. du Pont de Nemours and Company. All rights reserved.

Data Table for Tychem® Limited-Use Fabrics

Class	Sub- Class	Chemical Name	CAS	Phase	Tychem® CPF 1	Tychem® QC	Tychem® CPF 2	Tychem® SL	Tychem® CPF 3	Tychem® F	Tychem® CPF 4	Tychem® BR and Tychem® LV	Tychem® Responder®	Tychem® TK	Tychem® Reflector®
		Chlorine, 20 ppm	7782-50-5	G		>480*	>480*	>480*			>480*		>480*		
						nd	nd	nd			nd		nd		
		Chlorine dioxide, 5%	10049-04-4	G									>480		
													<0.1		
		Chlorine dioxide, 150 ppm	10049-04-4	G								>480	>480	>480	>480
												<0.01	<0.01	<0.01	<0.01
		Chlorine dioxide, 1000 ppm	10049-04-4	G								>480	>480	>480	>480
												<0.01	<0.01	<0.01	<0.01
		Chlorine gas	7782-50-5	G		imm.	>480	>480	>480	>480*	>480	>480	>480	>480	>480
						>50	<0.1	<0.1	<0.1	0.2	<0.1	<0.01	<0.1	<0.02	<0.1
		Chlorine liquid (-70°C)	7782-50-5	L					>480		>480		>480	>480	>480
									<0.01		<0.01		<0.1	<0.01	<0.01
		Chlorine trifluoride	7790-91-2	G								45	160	45	45
												96	>53	96	96
		Diborane, 10%	19287-45-7	G								>480	>480	>480	>480
												<0.005	<0.1	<0.005	<0.005
		Fluorine	7782-41-4	G									>480	>480	
													<0.1	<0.002	
		Hydrogen bromide	10035-10-6	G						>480		>480	>480	>480	>480
										<0.0001		<0.1	<0.1	<0.1	<0.1
		Hydrogen chloride gas	7647-01-0	G		imm.	>480	>480	>480	>480	>480	>480	>480	>480	>480
						9.3	<0.1	<0.1	<0.01	<0.1	<0.1	<0.1	<0.1	<0.1	<0.1
		Hydrogen chloride liquid (-90°C)	7647-01-0	L										>180	
														<0.1	
		Hydrogen cyanide gas	74-90-8	G					30		>480	>480	>480	>480	>480
									1.06		<0.1	<.022	<0.1	<0.01	<0.05
		Hydrogen fluoride gas	7664-39-3	G		imm.	35	35	170	imm.	20*	135	>480	>480	>480
						6	3	3	6.7	high	3	6.7	<0.1	<0.1	<0.0174
		Hydrogen fluoride liquid (0°C)	7664-39-3	L					50					290	
									5.73					1.3	
		Hydrogen fluoride liquid (4°C)	7664-39-3	L							300			290	
											1.3			1.3	
		Hydrogen fluoride liquid (15°C)	7664-39-3	L									>480		>480
													<0.1		<0.1
		Hydrogen fluoride liquid (18°C)	7664-39-3	L						43					
										2.2					
		Hydrogen selenide	7783-07-5	G								>480	>480	>480	>480
												<0.01	<0.01	<0.01	<0.01
		Hydrogen sulfide	7783-06-4	G					imm.			>480	>480	>480	>480
									1.8			<0.01	<0.1	<0.01	<0.01
		Nitric oxide	10102-43-9	G										>480	
														<0.04	

Copyright © 2004 E. I. du Pont de Nemours and Company. All rights reserved.

Data Table for Tychem® Limited-Use Fabrics

Class	Sub- Class	Chemical Name	CAS	Phase	Tychem® CPF 1	Tychem® QC	Tychem® CPF 2	Tychem® SL	Tychem® CPF 3	Tychem® F	Tychem® CPF 4	Tychem® BR and Tychem® LV	Tychem® Responder®	Tychem® TK	Tychem® Reflector®
		Nitrogen dioxide	10102-44-0	G			>480	>480		14	>480		>480		
							<0.001	<0.001		>0.2	<0.001		<0.001		
		Nitrogen tetroxide	10544-72-6	G								90	220	90	420
												>1.1	7	>1.1	10
		Nitrogen tetroxide (0°C)	10544-72-6	L								>480	>480	>480	>480
												0.001	0.001	0.001	0.001
		Nitrogen tetroxide (21°C)	10544-72-6	L										450	
														0.2	
		Nitrogen trifluoride	7783-54-2	G								>480	>480	>480	>480
												<0.014	<0.1	<0.014	<0.014
		Nitrous oxide	10024-97-2	G								>480	>480	>480	>480
												<0.018	<0.1	<0.018	<0.018
		Phosgene	75-44-5	G					>480	>480		>480	>480	>480	>480
									<0.1	<0.02		<0.1	<0.1	<0.1	<0.1
		Phosphine	7803-51-2	G						imm.		>480	>480	>480	>480
										>0.11		<0.01	<0.1	<0.01	<0.01
		Sulfur dioxide	7446-09-5	G		imm.	>480	>480		38*	>480	>480	>480	>480	>480
						>29	<0.1	<0.1		2	<0.1	<0.01	<0.1	<0.01	<0.01
		Sulfur hexafluoride	2551-62-4	G								>480	>480	>480	>480
												<0.015	<0.1	<0.015	<0.015
		Sulfuryl chloride	7791-25-5	L						>480		>480	>480	>480	>480
										<0.01		<0.1	<0.1	<0.1	<0.1
		Tungsten hexafluoride	7783-82-6	G								>480	>480	>480	>480
												<0.026	<0.1	<0.026	<0.026
360	**Inorganic Acid Halides**														
		Aluminum chloride	7446-70-0	L							>480				
											<0.1				
		Antimony pentachloride	7647-18-9	L			>480	>480		15	>480		>480		
							<0.1	<0.1		10	<0.1		<0.1		
		Boron trichloride	10294-34-5	G								>480	>480	>480	>480
												<0.02	<0.1	<0.02	<0.02
		Boron trifluoride	7637-07-2	G								>480	>480	>480	>480
												<0.1	<0.1	<0.1	<0.1
		Phosphorus oxychloride	10025-87-3	L						>480		>480	>480	>480	>480
										<0.01		<0.1	<0.1	<0.1	<0.1
		Phosphorus trichloride	7719-12-2	L			20	20	>480	>480	20	>480	>480	>480	>480
							28	28	<0.1	0.003	28	<0.1	<0.1	<0.1	<0.1
		Silicon tetrachloride	10026-04-7	L			80	80		>480	80	>480	>480	>480	>480
							7.8	7.8		0.0001	7.8	<0.1	<0.1	<0.1	<0.1
		Sulfuryl chloride	7791-25-5	L						>480		>480	>480	>480	>480
										0.01		<0.1	<0.1	<0.1	<0.1
		Thionyl chloride	7719-09-7	L					15	imm.		35	45	90	35
									1260	101		2500	243	63.6	2500
		Titanium tetrachloride	7550-45-0	L			15	15	120	>480	15	>480	>480	>480	>480
							73	73	11.6	0.0001	73	<0.1	<0.1	<0.1	<0.1

Copyright © 2004 E. I. du Pont de Nemours and Company. All rights reserved.

Data Table for Tychem® Limited-Use Fabrics

Class	Sub- Class	Chemical Name	CAS	Phase	Tychem® CPF 1	Tychem® QC	Tychem® CPF 2	Tychem® SL	Tychem® CPF 3	Tychem® F	Tychem® CPF 4	Tychem® BR and Tychem® LV	Tychem® Responder®	Tychem® TK	Tychem® Reflector®
365 Inorganic Acid Oxides															
		Sulfur dioxide	7446-09-5	G		imm.	>480	>480		38*	>480	>480	>480	>480	>480
						>29	<0.1	<0.1		2	<0.1	<0.01	<0.1	<0.01	<0.01
		Sulfur trioxide	7446-11-9	L								90	90	90	90
												696	696	696	696
		Sulfur trioxide (60°C)	7446-11-9	L									90		
													>100		
370 Inorganic Acids															
		Chlorosulfonic acid	7790-94-5	L			>480	>480	330	>480	>480	180	>480	>480	180
							<0.1	<0.1	0.97	0.0003	<0.1	98	<0.1	<0.1	98
		Chromic acid, 60-62%	1333-82-0	L		>480	>480	>480			>480		>480		
						<0.1	<0.1	<0.1			<0.1		<0.1		
		Fluoroboric acid, 48-50%	16872-11-0	L			>480	>480	>480		>480				
							<0.1	<0.1	<0.1		<0.1				
		Fluorosilicic acid	16961-83-4	L						>480		>480	>480	>480	>480
										0.0001		<0.1	<0.1	<0.1	<0.1
		Fluorosilicic acid, 30%	16961-83-4	L									>480		
													<0.1		
		Fluorosulfonic acid	7789-21-1	L								>480	>480	>480	>480
												<0.1	<0.1	<0.1	<0.1
		Hydriodic acid, 47%	10034-85-2	L			>480	>480			>480		>480		
							<0.1	<0.1			<0.1		<0.1		
		Hydriodic acid, 57%	10034-85-2	L					>480	>480		>480	>480	>480	>480
									<0.01	<0.01		<0.1	<0.1	<0.1	<0.1
		Hydrobromic acid, 48%	10035-10-6	L									>480		
													<0.1		
		Hydrochloric acid, 37%	7647-01-0	L	90	86	>480	>480	>480	>480	>480	>480	>480	>480	>480
					1.4	1.1	<0.1	<0.1	<0.1	<0.1	<0.1	<0.02	<0.02	<0.02	<0.1
		Hydrofluoric acid, 48-51%	7664-39-3	L	>480	>480	>480	>480	180	>480	>480	>480	>480	>480	>480
					<0.1	0.08	<0.1	<0.1	0.86	<0.1	<0.1	<0.02	<0.02	<0.02	<0.1
		Hydrofluoric acid, 70%	7664-39-3	L			imm.	imm.		39	imm.			>480	
							0.6	0.6		1.2	0.6			<0.1	
		Hydrofluoric acid, 92% (90°C)	7664-39-3	L								67*	67*	67*	67*
												2.8	2.8	2.8	2.8
		Hydrogen bromide	10035-10-6	G						>480		>480	>480	>480	>480
										0.0001		<0.1	<0.1	<0.1	<0.1
		Hydrogen cyanide liquid	74-90-8	L		60*						105	105	>480	105
						0.11						1.7	1.7	<0.01	1.7

Copyright © 2004 E. I. du Pont de Nemours and Company. All rights reserved.

Data Table for Tychem® Limited-Use Fabrics

Class	Sub- Class	Chemical Name	CAS	Phase	Tychem® CPF 1	Tychem® QC	Tychem® CPF 2	Tychem® SL	Tychem® CPF 3	Tychem® F	Tychem® CPF 4	Tychem® BR and Tychem® LV	Tychem® Responder®	Tychem® TK	Tychem® Reflector®
		Hydrogen fluoride liquid (0°C)	7664-39-3	L					50					290	
									5.73					1.3	
		Hydrogen fluoride liquid (4°C)	7664-39-3	L							300			290	
											1.3			1.3	
		Hydrogen fluoride liquid (15°C)	7664-39-3	L									>480		>480
													<0.1		<0.1
		Hypophosphorus acid, 50%	6303-21-5	L					>480	>480					
									<0.01	<0.01					
		Nitric acid, 70%	7697-37-2	L	>480	410*	>480	>480		>480	>480	>480	>480	>480	>480
					<0.1	0.7	<0.1	<0.1		<0.001	<0.1	<0.1	<0.1	<0.1	<0.1
		Nitric acid, 90%	7697-37-2	L					>480			>480	>480	>480	>480
									<0.1			<0.033	<0.033	<0.033	<0.033
		Nitric acid, red fuming	52583-42-3	L						14		>480	>480	>480	>480
										>50		<0.033	<0.033	<0.033	<0.033
		Oleum, 103%	8014-95-7	L										>480	
														<0.1	
		Oleum, 27-33% free SO_3	8014-95-7	L			450	450			450		450		
							0.005	0.005			0.005		0.005		
		Oleum, 40% free SO_3	8014-95-7	L		398	>480	>480		>480	>480	>480	>480	>480	>480
						0.2	<0.04	<0.04		<0.32	<0.04	<0.04	<0.1	<0.04	<0.04
		Oleum, 65% free SO_3	8014-95-7	L					15		>480			>480	
									>50		<0.1			<0.1	
		Perchloric acid, 70%	7601-90-3	L								>480	>480	>480	>480
												<0.1	<0.1	<0.1	<0.1
		Phosphoric acid, 75%	7664-38-2	L					15						
									60						
		Phosphoric acid, 85%	7664-38-2	L	>480		>480	>480		>480	>480	>480	>480	>480	>480
					<0.1		<0.1	<0.1		<0.1	<0.1	<0.1	<0.1	<0.1	<0.1
		Sulfuric acid 50%	7664-93-9	L											
		Sulfuric acid 95-98%	7664-93-9	L	>480	>480	>480	>480	>480	>480	>480	>480	>480	>480	>480
					<0.1	<0.1	<0.1	<0.1	<0.1	<0.1	<0.1	<0.1	<0.1	<0.1	<0.1

Copyright © 2004 E. I. du Pont de Nemours and Company. All rights reserved.

Data Table for Tychem® Limited-Use Fabrics

Class	Sub- Class	Chemical Name	CAS	Phase	Tychem® CPF 1	Tychem® QC	Tychem® CPF 2	Tychem® SL	Tychem® CPF 3	Tychem® F	Tychem® CPF 4	Tychem® BR and Tychem® LV	Tychem® Responder®	Tychem® TK	Tychem® Reflector®
380 Inorganic Bases															
		Ammonia liquid	7664-41-7	L			>480	>480	>480		>480		>480	>480	>480
							<0.1	<0.1	<0.1		<0.01		<0.1	<0.1	<0.07
		Ammonium hydroxide, 28-30%	1336-21-6	L		imm.	>480	>480	89	>480	>480	160	>480	>480	>480
						62	<0.1	<0.1	32	<0.1	<0.1	4.7	<0.1	<0.1	<0.02
		Lithium hydroxide, 20%	1310-65-2	L		>480									
						<0.1									
		Potassium hydroxide	1310-58-3	L								>480	>480	>480	>480
												<0.008	<0.008	<0.008	<0.008
		Potassium hydroxide, 45%	1310-58-3	L							>480	>480	>480	>480	>480
											<0.1	<0.008	<0.008	<0.008	<0.008
		Sodium hydroxide, conc.	1310-73-2	S						>480					
										<0.1					
		Sodium hydroxide, 42-50%	1310-73-2	L	>480	>480	>480	>480	>480	>480	>480	>480	>480	>480	>480
					<0.1	<0.1	<0.1	<0.1	<0.1	<0.1	<0.1	<0.1	<0.1	<0.1	<0.1
		Sodium hydroxide, sat. sol. in water	1310-73-2	L		>480	>480	>480			>480		>480		
						<0.1	<0.1	<0.1			<0.1		<0.1		
390 Ketones															
	391 Aliphatic and Alicyclic														
		Acetone	67-64-1	L	imm.	imm.	12	12	>480	>480	>480	>480	>480	>480	>480
					1.9	10	3.2	3.2	<0.1	0.06	<0.1	<0.001	<0.1	<0.01	<0.1
		Chloroacetone	78-95-5	L			>480	>480			>480		>480		
							0.08	0.08			0.08		0.08		
		Cyclohexanone	108-94-1	L			136	136			136	>480	>480	>480	>480
							1.97	1.97			1.97	<0.01	<0.01	<0.01	<0.01
		1,3-Dichloroacetone (40ºC)	534-07-6	L						>480		>480	>480	>480	>480
										<0.02		<0.1	<0.1	<0.1	<0.1
		Mesityl oxide	141-79-7	L									>480		
													<0.1		
		Methyl ethyl ketone	78-93-3	L			10	10	>480	71	>480	>480	>480	>480	>480
							13	13	<0.1	0.37	<0.1	<0.007	<0.007	<0.007	<0.01
		Methyl isobutyl ketone	108-10-1	L					>480	>480		>480	>480	>480	>480
									<0.02	<0.01		0.001	<0.1	0.001	<0.001
		1,1,3-Trichloroacetone	921-03-9	L						>480					
										<0.05					
	392 Aromatic														
		Acetophenone	98-86-2	L							>480				
											<0.1				
		Chloroacetophenone	532-27-4	L									>480		
													<0.1		

Copyright © 2004 E. I. du Pont de Nemours and Company. All rights reserved.

Data Table for Tychem® Limited-Use Fabrics

Class	Sub- Class	Chemical Name	CAS	Phase	Tychem® CPF 1	Tychem® QC	Tychem® CPF 2	Tychem® SL	Tychem® CPF 3	Tychem® F	Tychem® CPF 4	Tychem® BR and Tychem® LV	Tychem® Responder®	Tychem® TK	Tychem® Reflector®
430 Nitriles															
	431 Aliphatic and Alicyclic														
		Acetone cyanohydrin	75-86-5	L						>480		>480	>480	>480	>480
										<0.05		<0.01	<0.01	<0.01	<0.01
		Acetonitrile	75-05-8	L	imm.	imm.	12	12	imm.	157	>480	>480	>480	>480	>480
					1.9	16	2.8	2.8	0.78	0.19	<0.1	<0.003	<0.1	<0.1	<0.1
		Acrylonitrile	107-13-1	L		imm.	50	50	13	12	377	>480	>480	>480	>480
						10.6	1.2	1.2	0.75	0.57	0.18	<0.001	<0.1	<0.001	<0.001
		Adiponitrile	111-69-3	L						>480		>480	>480	>480	>480
										<0.05		<0.1	<0.1	<0.1	<0.1
		2-Chloroacrylonitrile	920-37-6	L									>480		
													<0.1		
		2-Methylglutaronitrile, 87%	4553-62-2	L						>480		>480	>480	>480	>480
										<0.1		<0.1	<0.1	<0.1	<0.1
		2-Pentenenitrile	13284-42-9	L						>480			>480		
										<0.02			<0.1		
		cis-2-Pentenenitrile, 70%	25899-50-7	L								>480	>480	>480	>480
												<0.001	<0.001	<0.001	<0.001
		3-Pentenenitrile	4635-87-4	L								>480	>480	>480	>480
												<0.001	<0.001	<0.001	<0.001
	432 Aromatic														
		Benzonitrile	100-47-0	L						>480		>480	>480	>480	>480
										<0.001		<0.004	<0.1	<0.004	<0.004
		Benzyl Chloride	140-29-4	L					>390	>390					
									<0.01	<0.01					
440 Nitro Compounds															
	441 Unsubstituted														
		Nitrobenzene	98-95-3	L	imm.	imm.	102	102	>480	>480	>480	>480	>480	>480	>480
					7.2	18	2.3	2.3	<0.1	<0.001	<0.1	<0.01	<0.1	<0.01	<0.1
		Nitromethane	75-52-5	L						229		>480	>480	>480	>480
										0.97		<0.005	<0.1	<0.005	<0.005
		2-Nitropropane	79-46-9	L						>480		>480	>480	>480	>480
										<0.05		<0.01	<0.01	<0.01	<0.01
	442 Substituted														
		4,6-Dinitro-o-cresol, 90+%	534-52-1	L							>480				
											<0.1				
		Dinitro-o-cresol, sat. sol. in methanol	534-52-1	L								>480	>480	>480	>480
												<0.013	<0.013	<0.013	<0.013
		o-Nitrochlorobenzene	88-73-3	S		15	237	237			237		237		
						4.1	0.61	0.61			0.61		0.61		
		o-Nitrochlorobenzene (35ºC)	88-73-3	L			80	80			80		80		
							2.4	2.4			2.4		2.4		

Copyright © 2004 E. I. du Pont de Nemours and Company. All rights reserved.

Data Table for Tychem® Limited-Use Fabrics

Class	Sub- Class	Chemical Name	CAS	Phase	Tychem® CPF 1	Tychem® QC	Tychem® CPF 2	Tychem® SL	Tychem® CPF 3	Tychem® F	Tychem® CPF 4	Tychem® BR and Tychem® LV	Tychem® Responder®	Tychem® TK	Tychem® Reflector®
		p-Nitrochlorobenzene	100-00-5	S		imm.	476	476			476		476		
						2.3	0.11	0.11			0.11		0.11		
		p-Nitrochlorobenzene (85ºC)	100-00-5	L			321	321			321		321		
							1.5	1.5			1.5		1.5		
		2-Nitrophenol (70ºC)	88-75-5	L			imm.	imm.			imm.	208	208	208	208
							4.53	4.53			4.53	0.17	0.17	0.17	0.17
		o-Nitrotoluene	88-72-2	L			317	317			317		317		
							0.41	0.41			0.41		0.41		
		p-Nitrotoluene	99-99-0	S		imm.	123	123			123		123		
						14	2.2	2.2			2.2		2.2		
		p-Nitrotoluene (60ºC)	99-99-0	L			imm.	imm.			imm.		imm.		
							42	42			42		42		
450 Nitroso Compounds															
		Dimethyl nitrosamine	62-75-9	L						>480					
										<0.001					
460 Organo-Phosphorus Compounds															
	462 Derivatives of Phosphorus-based acids														
		Diazinon, 25%	333-41-5	L			>480	>480			>480		>480		
							<0.1	<0.1			<0.1		<0.1		
		Chlorpyrifos, 7%	2921-88-2	L			>480	>480			>480		>480		
							<0.1	<0.1			<0.1		<0.1		
		Ethyl parathion	56-38-2	L								>480	>480	>480	>480
												<0.01	<0.01	<0.01	<0.01
		Malathion	121-75-5	L								>480	>480	>480	>480
												<0.013	<0.013	<0.1	<0.013
		Malathion, 50% in water	121-75-5	L			>480	>480			>480		>480		
							<0.1	<0.1			<0.1		<0.1		
		Malathion, 50% in methanol	121-75-5	L								>480	>480	>480	>480
												<0.1	<0.1	<0.1	<0.1
		Methyl parathion	298-00-0	L									>480		
													<0.1		
		Sarin (GB) Chemical Agent	107-44-8	L	See "Chemical Warfare Agents" Data Sheet for test protocols and results.										
		Soman (GD) chemical agent	96-64-0	L	See "Chemical Warfare Agents" Data Sheet for test protocols and results.										
		Skydrol®	95660-51-8	L		>480							>480		
						<0.01							<0.1		
		Tabun	77-81-6	L	See "Chemical Warfare Agents" Data Sheet for test protocols and results.										
		Tetraethyl lead	78-00-2	L					>480			>480	>480	>480	>480
									<0.1			<0.07	<0.07	<0.07	<0.07
		Trimethyl phosphate	512-56-1	L								>480	>480	>480	>480
												<0.1	<0.1	<0.1	<0.1

Copyright © 2004 E. I. du Pont de Nemours and Company. All rights reserved.

Data Table for Tychem® Limited-Use Fabrics

Class	Sub- Class	Chemical Name	CAS	Phase	Tychem® CPF 1	Tychem® QC	Tychem® CPF 2	Tychem® SL	Tychem® CPF 3	Tychem® F	Tychem® CPF 4	Tychem® BR and Tychem® LV	Tychem® Responder®	Tychem® TK	Tychem® Reflector®
		Trimethyl phosphite	121-45-9	L			10	10			10	>480	>480	>480	>480
							0.5	0.5			0.5	<0.1	<0.1	<0.1	<0.1
		Triphenyl phosphite	101-02-0	L									>480		
													<0.1		
		Tritolyl phosphate	1330-78-5	L							>480				
											<0.1				
		Vinylmagnesium chloride, 16.5%	3536-96-7	L								>480	>480	>480	>480
												<0.01	<0.01	<0.01	<0.01
		VX Nerve agent	50782-69-9	L	See "Chemical Warfare Agents" Data Sheet for test protocols and results.										
470 Organo-Metallic Compounds															
		Lewisite (L) Chemical Agent	541-25-3	L	See "Chemical Warfare Agents" Data Sheet for test protocols and results.										
		Nickel carbonyl	13463-39-3	L										>480	
														<0.04	
		Organo-Tin Paint	mixture	L									>240		
													<0.1		
		Triethylaluminum	97-93-8	L											>480
															<0.1
480 Organo-Silicon Compounds															
		Dichlorosilane	4109-96-0	G								>480	>480	>480	>480
												<0.1	<0.1	<0.1	<0.1
		Dimethyldichlorosilane	75-78-5	L			>480	>480		>480	>480		>480	>480	
							<0.1	<0.1		<0.0001	<0.1		<0.1	<0.1	
		Hexamethyldisilazane	999-97-3	L			>480	>480			>480	>480	>480	>480	>480
							<0.03	<0.03			<0.03	<0.02	<0.1	<0.02	<0.02
		Methyl trichlorosilane	75-79-6	L						>480		>480	>480	>480	>480
										<0.0001		<0.1	<0.1	<0.1	<0.1
		Silane	7803-62-5	G								>480	>480	>480	>480
												<0.1	<0.1	<0.1	<0.1
		Silicon tetrachloride	10026-04-7	L			80	80		>480	80	>480	>480	>480	>480
							7.8	7.8		<0.0001	7.8	<0.1	<0.1	<0.1	<0.1
		Tetraethoxysilane	78-10-4	L								>480	>480	>480	>480
												<0.014	<0.014	<0.014	<0.014
		Trichlorophenylsilane	98-13-5	L			>480	>480		>480	>480		>480	>480	
							<0.1	<0.1		<0.001	<0.1		<0.1	<0.1	
		Trichlorosilane	10025-78-2	L			30	30			30	>480	>480	>480	>480
							59	59			59	<0.022	<0.1	<0.022	<0.022
		Trichlorovinylsilane	75-94-5	L			75	75			75		75		
							3.6	3.6			3.6		3.6		
		Triethoxysilane	998-30-1	L									>480		
													<0.1		

Copyright © 2004 E. I. du Pont de Nemours and Company. All rights reserved.

Data Table for Tychem® Limited-Use Fabrics

Class	Sub- Class	Chemical Name	CAS	Phase	Tychem® CPF 1	Tychem® QC	Tychem® CPF 2	Tychem® SL	Tychem® CPF 3	Tychem® F	Tychem® CPF 4	Tychem® BR and Tychem® LV	Tychem® Responder®	Tychem® TK	Tychem® Reflector®
500 Sulfur Compounds															
	501 Thiols														
		Methyl mercaptan	74-93-1	G						>480		>480	>480	>480	>480
										0.05		<0.001	<0.1	<0.001	<0.001
		Phenyl mercaptan	108-98-5	L			19	19			19	>480	>480	>480	>480
							3.6	3.6			3.6	<0.02	<0.02	<0.02	<0.02
		Thioglycolic acid	68-11-1	L						>480		>480	>480	>480	>480
										<0.0001		<0.1	<0.1	<0.1	<0.1
	502 Sulfides and Disulfides														
		Carbon disulfide	75-15-0	L	imm.	imm.	imm.	imm.	16	>480	>480	>480	>480	>480	>480
					>10	high	>10	>50	0.51	0.05	<0.1	<0.001	<0.1	<0.02	<0.1
		Dimethyl sulfide	75-18-3	L						271					
										1.21					
		Dimethyl disulfide	624-92-0	L									>480		
													<0.1		
		Disulfur dichloride	10025-67-9	L					210			>480	>480	>480	>480
									6.2			<0.01	<0.01	<0.01	<0.01
		Hydrogen sulfide	7783-06-4	G					imm.			>480	>480	>480	>480
									1.8			<0.01	<0.01	<0.01	<0.01
		Sulfur dichloride, 80%	10545-99-0	L					imm.		40	70	448	>480	70
									41		4.94	6	0.33	<0.1	6
		Sulfur dichloride, 99%	10545-99-0	L										440	
														0.3	
		Sulfur mustard (HD) chemical agent	505-60-2	L	See "Chemical Warfare Agents" Data Sheet for test protocols and results.										
	503 Sulfones and Sulfoxides														
		Dimethyl sulfoxide	67-68-5	L						36		>480	>240	>480	>480
										1.9		0.003	<0.1	0.003	0.003
	504 Sulfonic Acids														
		Chlorosulfonic acid	7790-94-5	L			>480	>480	330	>480	>480	180	>480	>480	180
							<0.1	<0.1	0.97	0.0003	<0.1	98	<0.1	<0.1	98
		Methanesulfonic acid	75-75-2	L			>480	>480			>480		>480		
							<0.1	<0.1			<0.1		<0.1		
		p-Toluenesulfonic acid Monohydrate	6192-52-5	L							>480				
											<0.1				
		Trifluoromethane sulfonic acid	1493-13-6	L			>480	>480			>480	>480	>480	>480	>480
							<0.01	<0.01			<0.01	<0.01	<0.01	<0.01	<0.01
	505 Sulfonyl Chlorides														
		Benzene sulfonyl chloride	98-09-9	L						>480		>480	>480	>480	>480
										<0.02		<0.1	<0.1	<0.1	<0.1
		MethaneSulfonyl Chloride	124-63-0	L								>480	>480	>480	>480
												<0.0006	<0.0006	<0.0006	<0.0006

Copyright © 2004 E. I. du Pont de Nemours and Company. All rights reserved.

Data Table for Tychem® Limited-Use Fabrics

Class	Sub- Class	Chemical Name	CAS	Phase	Tychem® CPF 1	Tychem® QC	Tychem® CPF 2	Tychem® SL	Tychem® CPF 3	Tychem® F	Tychem® CPF 4	Tychem® BR and Tychem® LV	Tychem® Responder®	Tychem® TK	Tychem® Reflector®
	507 Sulfonates, Sulfates,and Sulfites														
		Diethyl sulfate	64-67-5	L						>480			>480	>480	
										<0.02			<0.1	<0.1	
		Dimethyl sulfate	77-78-1	L			>480	>480			>480	>480	>480	>480	>480
							<0.1	<0.1			<0.1	<0.001	<0.1	<0.001	<0.001
	509 Other														
		Sulfur hexafluoride	2551-62-4	G								>480	>480	>480	>480
												<0.015	<0.1	<0.015	<0.015
		Trifluoromethane Sulfonic Acid	935-92-2	L						>480					
										<0.1					
		Sodium methylate, 50% in methanol	124-41-4	L								>480	>480	>480	>480
												<0.1	<0.1	<0.1	<0.1
590 Miscellaneous (Not classified)															
		AFFF	191681-14-8	L									>240		
													<0.1		
		Black Liquor	308074-23-9	L		>480	>480	>480			>480	>480	>480	>480	>480
						<0.1	<0.1	<0.1			<0.1	<0.1	<0.1	<0.1	<0.1
		Borane-pyridine complex	110-51-0	L									>480		
													<0.1		
		Boron trifluoride Dimethyletherate	353-42-4	L						>480					
										<0.01					
		Boron trifluoride etherate	109-63-7	L										>480	
														<0.1	
		Chemidize 727 ND	mixture	L			>480	>480			>480		>480		
							<0.06	<0.06			<0.06		<0.06		
		Crude oil	8002-05-9	L		imm.	>480	>480			>480	>480	>480	>480	>480
						3.3	<0.01	<0.01			<0.01	<0.04	<0.04	<0.04	<0.04
		Decontaminating Agent (DS-2)	mixture	L									>240		
													<0.1		
		2,4-Dichloro-6-isopropyl-S-triazine 22%,Toluene 78%	mixture	L								>480	>480	>480	>480
												<0.1	<0.1	<0.1	<0.1
		Dowtherm Heat Transfer Fluid	8004-13-5	L									>480		
													<0.1		
		DuPont Activator 193S	mixture	L		>480									
						<0.1									
		DuPont Activator 4505S	mixture	L		>480									
						<0.01									
		DuPont Activator 4507S	mixture	L		>480									
						<0.1									
		Ethyl benzene 80%, 4,6-Dinitro-o-cresol 20%	mixture	L			45*	45*			45*		45*		
							18	18			18		18		
		Gasohol	mixture	L			>480	>480			>480		>480		
							<0.1	<0.1			<0.1		<0.1		
		Glade Intech 200	mixture	L			>480	>480			>480		>480		
							<0.1	<0.1			<0.1		<0.1		

Copyright © 2004 E. I. du Pont de Nemours and Company. All rights reserved.

Data Table for Tychem® Limited-Use Fabrics

Class	Sub- Class	Chemical Name	CAS	Phase	Tychem® CPF 1	Tychem® QC	Tychem® CPF 2	Tychem® SL	Tychem® CPF 3	Tychem® F	Tychem® CPF 4	Tychem® BR and Tychem® LV	Tychem® Responder®	Tychem® TK	Tychem® Reflector®
		Green liquor	68131-30-6	L		>480	>480	>480			>480	>480	>480	>480	>480
						<0.1	<0.1	<0.1			<0.1	<0.1	<0.1	<0.1	<0.1
		Methyl ethyl ketoxime	96-29-7	L			>480	>480		>480	>480	>480	>480	>480	>480
							<0.1	<0.1		<0.02	<0.1	<0.1	<0.1	<0.1	<0.1
		Otto Fuel II	106602-80-6	L									>480		
													<0.1		
		t-Sodium-amylate / t-amyl alcohol	mixture	S								120	120	120	120
												4.9	4.9	4.9	4.9
		Tetramethyltin (0.5%) in n-pentane	mixture	L								>480	>480	>480	>480
												<0.006	<0.006	<0.006	<0.006
		White liquor	68131-33-9	L		>480	>480	>480			>480	>480	>480	>480	>480
						<0.1	<0.1	<0.1			<0.1	<0.1	<0.1	<0.1	<0.1
595	**Chemical Warfare Agents**			See "Chemical Warfare Agents" Data Table for test results and protocols.											

DuPont™ is a trademark of E. I. du Pont de Nemours and Company.

Tyvek®, Tychem®, Responder®, and Reflector® are registered trademarks of E. I. du Pont de Nemours and Company.

Copyright © 2004 E. I. du Pont de Nemours and Company. All rights reserved.

Data Table for Tychem® Reusable Fabrics

Note: Permeation test results are listed as follows:
Average Standardized Breakthrough Time (minutes)
Average Stead$_y$-State Permeation Rate (µg/cm^2/min.)

Symbols and Abbreviations used in data table:
> = more than < = less than
imm. = immediate (less than 10 minutes)
* Actual breakthrough time; standardized data not available.
S = Solid L = Liquid G = Gas

Class	Sub Class	Chemical Name	CAS Number	Phase	DuPont™ Tychem® CPE	DuPont™ Tychem® Butyl	DuPont™ Tychem® PVC
120 Aldehydes							
	122 Aromatic						
		2-Furaldehyde	98-01-1	L		>480	
						<0.1	
130 Amides							
	132 Aliphatic and Alicyclic						
		N,N-Dimethylformamide	68-12-2	L	249	>480	24
					55	<0.1	44
140 Amines							
	142 Aliphatic and Alicyclic, Secondary						
		Diethylamine	109-89-7	L	45	imm.	15
					322	527	10.6
220 Carboxylic Esters							
	222 Acetates						
		Ethyl acetate	141-78-6	L	54	28	imm.
					109	19	1342
240 Ethers							
	241 Aliphatic and Alicyclic						
		Tetrahydrofuran	109-99-9	L	20	imm.	imm.
					311	333	843
260 Halogen Compounds							
	261 Aliphatic and Alicyclic						
		Dichloromethane	75-09-2	L	13	imm.	imm.
					1418	583	425
		Methyl Chloride	74-87-3	G	>480		
					<0.003		
	264 Vinylic						
		1,1,2,2-Tetrachloroethylene	127-18-4	L	61	imm.	13
					192	10.3	1087

Copyright © 2004 DuPont Company. All rights reserved.

Data Table for Tychem® Reusable Fabrics

Class	Sub Class	Chemical Name	CAS Number	Phase	DuPont™ Tychem® CPE	DuPont™ Tychem® Butyl	DuPont™ Tychem® PVC
270 Heterocyclic Compounds							
	275 Oxygen, Epoxides						
		Ethylene oxide gas	75-21-8	G	80		
					73		
	277 Oxygen, Furans						
		2-Furaldehyde	98-01-1	L		>480	
						<0.1	
290 Hydrocarbons							
	291 Aliphatic and Alicyclic, Saturated						
		n-Hexane	110-54-3	L	78	imm.	imm.
					12	487	160
	292 Aromatic						
		Toluene	108-88-3	L	20	imm.	imm.
					300	770	1755
300 Peroxides							
		Hydrogen Peroxide, 50%	7722-84-1	L	>480		
					<0.002		
310 Hydroxylic Compounds							
	311 Aliphatic and Alicyclic, Primary						
		Methanol	67-56-1	L	>480	304	13
					<0.1	0.037	26
	313 Aliphatic and Alicyclic, Tertiary						
		Acetone cyanohydrin	75-86-5	L		>480	
						<0.1	
	316 Aromatic, Phenols						
		Phenol, 88%	108-95-2	L			15
							0.015
330 Elements							
		Chlorine gas	7782-50-5	G	417		
					0.43		
350 Inorganic Gases and Vapors							
		Ammonia gas	7664-41-7	G	>480		
					<0.1		
		Chlorine gas	7782-50-5	G	417		
					0.43		

Copyright © 2004 DuPont Company. All rights reserved.

Data Table for Tychem® Reusable Fabrics

Class	Sub Class	Chemical Name	CAS Number	Phase	DuPont™ Tychem® CPE	DuPont™ Tychem® Butyl	DuPont™ Tychem® PVC
		Hydrogen chloride gas	7647-01-0	G	>480		
					<0.1		
		Hydrogen fluoride gas	7664-39-3	G	>480	imm.	>480
					<0.1	500	<0.01
		Hydrogen fluoride liquid (20° C)	7664-39-3	L	>480	50	
					<0.1	240	
360	**Inorganic Acid Halides**						
		Titanium Tetrachloride	7550-45-0	L			>480
							<0.1
370 Inorganic Acids							
		Chromic Acid, 45%	1333-82-0	L	>480		
					<0.1		
		Hydrochloric acid, 37%	7646-01-0	L	>480	>480	>480
					<0.1	<0.1	<0.1
		Hydrofluoric acid, 48- 50%	7664-39-3	L		>480	>480
						<0.1	<0.1
		Hydrogen fluoride liquid (20° C)	7664-39-3	L	>480	50	
					<0.1	240	
		Nitric Acid, 70%	7697-37-2	G	>480		
					<0.1		
		Oleum, 27-33% free SO3	7664-93-9	L	>480		
					<0.1		
		Phosphoric Acid, 85%	7664-38-2	L	>480		
					<0.1		
		Sulfuric acid, 95+%	7664-93-9	L	>480	160	150
					<0.1	0.49	57
380 Inorganic Bases							
		Sodium hydroxide, saturated	1310-73-2	L	>480	>480	>480
					<0.1	<0.1	<0.1
390 Ketones							
	391 Aliphatic and Alicyclic						
		Acetone	67-64-1	L	54	125	imm.
					67.2	0.037	298
430 Nitriles							
	431 Unsubstituted						
		Acetone cyanohydrin	75-86-5	L		>480	
						<0.1	

Copyright © 2004 DuPont Company. All rights reserved.

Data Table for Tychem® Reusable Fabrics

Class	Sub Class	Chemical Name	CAS Number	Phase	DuPont™ Tychem® CPE	DuPont™ Tychem® Butyl	DuPont™ Tychem® PVC
		Acetonitrile	75-05-8	L	316	120	
					0.55	0.022	
		Acrylonitrile	107-13-1	L		138	
						0.84	
		2-Pentenenitrile, 70%	25899-50-7	L		221	
						1.14	
440 Nitro Compounds							
	441 Unsubstituted						
		Nitrobenzene	98-95-3	L	169	>480	>480
					36	<0.1	<0.1
500 Sulfur Compounds							
	502 Sulfides and Disulfides						
		Carbon disulfide	75-15-0	L	imm.	imm.	imm.
					>50	380	153
	504 Sulfonic Acids						
		Chlorosulfonic acid	7790-94-5	L	150		
					>3000		
	507 Sulfonates, Sulfates, and Sulfites						
		Dimethyl sulfate	77-78-1	L		>480	
						<0.1	
590 Miscellaneous (Not Classified)							
		Black Liquor	308074-23-9	L			>480
							<0.1
		Green Liquor	68131-30-6	L			>480
							<0.1
		White Liquor	68131-33-9	L			>480
							<0.1

DuPont™ is a trademark of E. I. du Pont de Nemours and Company.
Tyvek®, Tychem®, Responder®, and Reflector® are registered trademarks of E. I. du Pont de Nemours and Company.
StaSafe® is a registered trademark of Standard Safety Equipment Company.

Copyright © 2004 DuPont Company. All rights reserved.

The Permeation Data Table shows test results for certain tested **(T)** chemicals in associated subclasses as defined in ASTM F1186. For chemicals not tested **(nt)**, the chemical subclass number is provided so users may view test results for tested chemicals in that subclass. Prediction of chemical resistance of a material from data on other chemicals has not been successful. However, when data is unavailable, information on related chemicals within a sub-class may at least rank alternative chemical protective materials as to their probable chemical resistance.

Chemical Name	Name in Data Table (if Synonym)	CAS Number	Class	Sub-Class	Limited Use	Re-usable
Acetaldehyde		75-07-0	120	121	T	nt
Acetamide		60-35-5	130	132	nt	nt
Acetic acid		64-19-7	100	102	T	T
Acetic anhydride		108-24-7	160	161	T	nt
Acetone		67-64-1	390	391	T	T
Acetone cyanohydrin		75-86-5	310 / 430	313 / 431	T	T
Acetonitrile		75-05-8	430	431	T	T
Acetophenone		98-86-2	390	392	T	nt
Acetoxyethane	Ethyl acetate	141-78-6	220	222	T	T
Acetyl bromide		506-96-7	110	111	T	nt
Acetyl chloride		75-36-5	110	111	T	nt
Acetylene dichloride	trans-1,2-Dichloroethylene	156-60-5	260	261	T	nt
Acridine		260-94-6	290	293	nt	nt
Acrolein		107-02-8	120	121	T	nt
Acrylamide		79-06-1	130	135	T	nt
Acrylic acid		79-10-7	100	102	T	T
Acrylic acid butyl ester	n-Butyl acrylate	141-32-2	220	223	T	nt
Acrylic acid ethyl ester	Ethyl acrylate	140-88-5	220	223	T	nt
Acrylic acid methyl ester	Methyl acrylate	96-33-3	220	223	T	nt
Acrylonitrile		107-13-1	430	431	T	T
Adipic acid		124-04-9	100	104	nt	nt
Adiponitrile		111-69-3	430	431	T	nt
AFFF		191681-14-8	590	590	T	nt
Allyl alcohol		107-18-6	310	311	T	T
Allylamine		107-11-9	140	141	nt	nt
Allyl bromide		106-95-6	260	265	nt	nt
Allyl chloride		107-05-1	260	265	T	nt
Allyl glycidyl ether		106-92-3	270	275	nt	nt
Alphamethyl-Benzenemethanol	1-Phenylethanol	98-85-1	310	318	T	nt
Aluminum chloride		7446-70-0	360	360	T	nt
Aluminum fluoride		7784-18-1	360	360	nt	nt
Aluminum hydroxide		21645-51-2	380	380	nt	nt
Aluminum nitrate		13473-90-0	340	340	nt	nt
Aluminum phosphate		7784-30-7	340	340	nt	nt

Chemical Name	Name in Data Table (if Synonym)	CAS Number	Class	Sub-Class	Limited Use	Re-usable
Aluminum sulfate hydrate		17927-65-0	340	340	T	nt
Aminobutane	sec-Butylamine	13952-84-6	140	141	T	nt
2-Aminoethanol	Ethanolamine	141-43-5	140 / 310	141 / 311	T	nt
2-Aminopropane	Isopropylamine	75-31-0	140	141	T	nt
2-Aminopyridine		504-29-0	270	271	T	nt
Ammonia gas		7664-41-7	350	350	T	T
Ammonia liquid		7664-41-7	350 / 380	350 / 380	T	nt
Ammonia solution	Ammonium hydroxide	1336-21-6	380	380	T	nt
Ammonium acetate		631-61-8	340	340	nt	nt
Ammonium chloride		12125-02-9	340	340	T	nt
Ammonium fluoride		12125-01-8	340	340	T	nt
Ammonium hydroxide		1336-21-6	380	380	T	nt
Ammonium sulfate		7783-20-2	340	340	nt	nt
Ammonium sulfide		12135-76-1	340	340	nt	nt
n-Amyl acetate		628-63-7	220	222	T	nt
Iso-amyl alcohol	Isoamyl alcohol	123-51-3	310	312	T	nt
Aniline		62-53-3	140	145	T	nt
Anisoyl chloride		100-07-2	110 / 240	112 / 243	nt	nt
Anthracene		120-12-7	290	293	T	nt
Antimony pentachloride		7647-18-9	360	360	T	nt
Antimony pentafluoride		7783-70-2	360	360	nt	nt
Antimony trichloride		10025-91-9	340	340	nt	nt
Arsenic acid		7778-39-4	370	370	nt	nt
Arsenic pentoxide		1303-28-2	365	365	nt	nt
Arsenic trichloride		7784-34-1	340	340	T	nt
Arsenic trioxide		1327-53-3	365	365	nt	nt
Arsine		7784-42-1	350	350	T	nt
Azinphos	Azinphos ethyl	2642-71-9	460	462	nt	nt
Azinphos ethyl		2642-71-9	460	462	nt	nt
Barium cyanide		542-62-1	345	345	nt	nt
Benzaldehyde		100-52-7	120	122	T	nt
1,2-Benzanthracene		56-55-3	290	293	nt	nt
Benzene		71-43-2	290	292	T	nt
1,3-Benzenediol		108-46-3	310	316	nt	nt
Benzene acetonitrile	Benzyl Cyanide	140-29-4	430	432	T	nt

Copyright © 2004 E. I. du Pont de Nemours and Company. All rights reserved.

Chemical Name	Name in Data Table (if Synonym)	CAS Number	Class	Sub-Class	Limited Use	Re-usable
Aluminum sulfate		10043-01-3	340	340	nt	nt
Benzene sulfonyl chloride		98-09-9	500	505	T	nt
Benzeneethanol	2-Phenylethyl Alcohol	60-12-8	310	318	T	nt
Benzenethiol	Phenyl mercaptan	108-98-5	500	501	T	nt
Benzidine		92-87-5	140	145 / 149	T	nt
Benzonitrile		100-47-0	430	432	T	nt
Benzophenanthrene		129-00-0	290	293	nt	nt
1,2-Benzophenanthrene		218-01-9	290	293	nt	nt
Benzo[a]pyrene		50-32-8	290	292 / 293	T	nt
Benzotrichloride		98-07-7	260	263	T	nt
Benzoyl chloride		98-88-4	110	112	T	nt
Benzyl acetate		140-11-4	220	222	nt	nt
Benzyl alcohol		100-51-6	310	312	T	nt
Benzyl benzoate		120-51-4	220	226	nt	nt
Benzyl bromide		100-39-0	260	266	nt	nt
Benzyl chloride		100-44-7	260	266	T	nt
Benzyl chloroformate		501-53-1	110	113	T	nt
Benzyl Cyanide		140-29-4	430	432	T	nt
Benzyl Nitrile	Benzyl Cyanide	140-29-4	430	432	T	nt
Beta-Phenethyl Alcohol	2-Phenylethanol	60-12-8	310	318	T	nt
Beta-Chloroprene	2-Chloro-1,3-butadiene	126-99-8	260	264	T	nt
Bicyclo[2.2.1]hept-5-en-2-ol	5-Norbornene-2-yl acetate	6143-29-9	220	222	T	nt
4,4'-bis (Aminophenyl) methane	4,4'-Methylene dianiline	101-77-9	140	145 / 149	T	nt
Bis (2-chloroethyl) sulfide	Sulfur mustard	505-60-2	500 / 595	502 / 595	T	nt
Bis(chloromethyl) ether		542-88-1	240 / 260	241 / 261	nt	nt
Bis(chloromethyl) ketone	1,3 Dichloroacetone	534-07-6	260 / 390	261 / 391	T	nt
Bis(2-ethylhexyl) phthalate	Di (2-ethylhexyl) phthalate	117-81-7	220	226	T	nt
Bisphenol A		80-05-7	310	316	nt	nt
Bisphenol-A diglycidyl ether		1675-54-3	270	275	T	nt
Bis(tributyltin)oxide		56-35-9	470	470	nt	nt
Black Liquor		308074-23-9	590	590	T	T
Bladex®		21725-46-2	270 / 430	274 / 431	nt	nt
Borane pyridine complex		110-51-0	590	590	T	T
Boric acid		10043-35-3	370	370	nt	nt
Boron trichloride		10294-34-5	350 / 360	350 / 360	T	nt
Boron trifluoride		7637-07-2	350 / 360	350 / 360	T	nt
Boron trifluoride diethyl etherate	Boron trifluoride etherate	109-63-7	590	590	T	nt
Boron trifluoride etherate		109-63-7	590	590	T	nt

Chemical Name	Name in Data Table (if Synonym)	CAS Number	Class	Sub-Class	Limited Use	Re-usable
Benzene hexachloride	Lindane	58-89-9	260	261	T	nt
Bromine pentafluoride		7789-30-2	360	360	nt	nt
Bromoacetonitrile		590-17-0	430	431	nt	nt
Bromobenzene		108-86-1	260	263	nt	nt
Bromochloromethane		74-97-5	260	261	T	nt
2-Bromoethanol		540-51-2	260 / 310	261 / 315	nt	nt
4-Bromofluorobenzene		460-00-4	260	263	T	nt
Bromomethane	Methyl bromide	74-83-9	260	261	T	nt
1-Bromo propane		106-94-5	310	315	nt	nt
1-Bromo-2-propanol		19686-73-8	260 / 310	261 / 315	nt	nt
3-Bromo-1-propanol		627-18-9	260 / 310	261 / 315	nt	nt
1,3-Butadiene		106-99-0	290	296	T	T
1,4-Butanediol		110-63-4	310	314	T	nt
1,4-Butanediol diglycidyl ether		2425-79-8	270	275	nt	nt
n-Butane		106-97-8	290	291	nt	nt
1,4-Butanesultone		1633-83-6	500	503	nt	nt
n-Butanethiol		109-79-5	500	501	nt	nt
1-Butanol	n-Butanol	71-36-3	310	311	T	nt
n-Butanol		71-36-3	310	311	T	nt
2-Butanone	Methyl ethyl ketone	78-93-3	390	391	T	nt
2-Butanone peroxide		1338-23-4	300	300	nt	nt
Butene		106-98-9	290	294	nt	nt
2-Butoxyethanol	Butyl Cellosolve®	111-76-2	240	245	T	nt
2-Butoxyethyl acetate		112-07-2	240	245	nt	nt
n-Butyl acetate		123-86-4	220	222	T	nt
n-Butyl acrylate		141-32-2	220	223	T	nt
n-Butyl alcohol	n-Butanol	71-36-3	310	311	T	nt
sec-Butyl alcohol		78-92-2	310	312	nt	nt
tert-Butyl alcohol		75-65-0	310	313	T	nt
n-Butylamine		109-73-9	140	141	T	nt
sec-Butylamine		13952-84-6	140	141	nt	nt
tert-Butylamine		75-64-9	140	141	T	nt
n-Butyl benzoate		136-60-7	220	226	nt	nt
Butyl benzyl phthalate		85-68-7	220	226	nt	nt
n-Butyl Carbitol®		112-34-5	240	245	nt	nt
4-tert-Butyl catechol		98-29-3	310	316	T	nt
Butyl Cellosolve® acetate		112-07-2	240	245	nt	nt
n-Butyl chloride		109-69-3	260	261	nt	nt
CFC 113	1,1,2-Trichloro-1,2,2-trifluoroethane	76-13-1	260	261	T	nt

Copyright © 2004 E. I. du Pont de Nemours and Company. All rights reserved.

Chemical Name	Name in Data Table (if Synonym)	CAS Number	Class	Sub-Class	Limited Use	Re-usable
Boron trifluoride dimethyletherate		353-42-4	590	590	T	nt
Bromine		7726-95-6	330	330	T	T
Bromine cyanide	Cyanogen bromide	506-68-3	345 / 350	345 / 350	nt	T
1,3-Butylene glycol		107-88-0	310	314	nt	nt
1,2-Butylene oxide		106-88-7	270	275	T	nt
n-Butyl ether		142-96-1	240	241	T	nt
Butyl glycol	Butyl Cellosolve®	111-76-2	240	245	T	nt
n-Butyl mercaptan		109-79-5	500	501	nt	nt
tert-Butyl mercaptan		75-66-1	500	501	nt	nt
tert-Butyl methyl ether	Methyl tert-butyl ether	1634-04-4	240	241	T	nt
o-sec-Butylphenol		89-72-5	310	316	nt	nt
p-tert-Butylphenol		98-54-4	310	316	nt	nt
n-Butyl phthalate		84-74-2	220	226	nt	nt
Butyl Cellosolve®		111-76-2	240	245	T	nt
n-Butyraldehyde		123-72-8	120	121	T	nt
n-Butyric acid		107-92-6	100	102	T	nt
Butyrolactone, gamma-		96-48-0	220	225	T	nt
Cadaverine		462-94-2	140	148	nt	nt
Cadmium fluoroborate		14486-19-2	360	360	nt	nt
Calcia		1305-78-8	380	380	nt	nt
Calcium bisulfate		13780-03-5	340	340	nt	nt
Calcium carbonate		1317-65-3	340	340	nt	nt
Calcium chloride		10043-52-4	340	340	T	nt
Calcium cyanide		592-01-8	345	345	nt	nt
Calcium fluoride		7789-75-5	340	340	nt	nt
Calcium hydroxide		1305-62-0	380	380	nt	nt
Calcium oxide		1305-78-8	380	380	nt	nt
Carbitol®	Ethylene diglycol monoethyl ether	111-90-0	240	245	T	nt
Carbolic acid	Phenol	108-95-2	310	316	T	T
Carbon disulfide		75-15-0	500	502	T	T
Carbon hexachloride		67-72-1	260	261	nt	nt
Carbon monoxide		630-08-0	350	350	T	nt
Carbon tetrabromide		558-13-4	260	261	nt	nt
Carbon tetrachloride		56-23-5	260	261	T	nt
Carbonyl chloride	Phosgene	75-44-5	350	350	T	T

Chemical Name	Name in Data Table (if Synonym)	CAS Number	Class	Sub-Class	Limited Use	Re-usable
Chemidize 727 ND		mixture	590	590	T	nt
Chlordane		57-74-9	260	261	T	nt
Chlorine		7782-50-5	330 / 350	330 / 350	T	T
Chlorine cyanide		506-77-4	345	345	nt	nt
Chlorine dioxide		10049-04-4	350	350	T	nt
Chlorine oxide	Chlorine dioxide	10049-04-4	350	350	T	nt
Chlorine sulfide	Sulfur dichloride	10545-99-0	500	502	T	nt
Chlorine trifluoride		7790-91-2	350	350	T	nt
2-Chloroacetaldehyde		107-20-0	120 / 260	121 / 261	nt	nt
Chloroacetic acid		79-11-8	100	103	T	nt
Chloroacetone		78-95-5	390	391	T	nt
Chloroacetonitrile		107-14-2	260 / 430	261 / 431	nt	nt
Chloroacetophenone		532-27-4	260 / 390	261 / 392	T	nt
Chloroacetyl chloride		79-04-9	110	111	T	nt
Chloroacrylonitrile		920-37-6	260 / 430	264 / 431	T	nt
4-Chloroaniline	p-Chloroaniline	106-47-8	140	145	T	nt
o-Chloroaniline		95-51-2	140	145	nt	nt
p-Chloroaniline		106-47-8	140	145	T	nt
Chlorobenzene		108-90-7	260	263	T	nt
4-Chlorobenzotrichloride		5216-25-1	260	263	T	nt
4-Chlorobenzotrifluoride		98-56-6	260	263	T	nt
2-Chloro-1,3-butadiene		126-99-8	260	264	T	nt
4-Chloro-m-cresol		59-50-7	260 / 310	263 / 316	nt	nt
Chloro Methyl Sulfone	Methanesulfonyl Chloride	124-63-0	500	505	T	nt
Chlorodecane mixed isomers		28519-06-4	260	261	nt	nt
Chlorododecane		112-52-7	260	261	nt	nt
2-Chloroethanol		107-07-3	260 / 310	261 / 315	T	nt
2-(2-Chloroethenyl) arsenous dichloride	Lewisite	541-25-3	470 / 595	470 / 595	T	nt
2-Chloroethyl ether	Dichloroethyl ether	111-44-4	240 / 260	241 / 261	T	nt
2-Chloroethyl vinyl ether		110-75-8	240 / 260	241 / 261	nt	nt
Chloroform		67-66-3	260	261	T	T
Chloromethane	Methyl chloride	74-87-3	260	261	T	nt
Chloromethyl methyl ether		107-30-2	240	241	T	nt
3-Chloro-2-methylpropene		563-47-3	260	265	nt	nt

Copyright © 2004 E. I. du Pont de Nemours and Company. All rights reserved.

Chemical Name	Name in Data Table (if Synonym)	CAS Number	Class	Sub-Class	Limited Use	Re-usable
Caustic soda	Sodium hydroxide	1310-73-2	380	380	T	T
Cellosolve®	Ethyl Cellosolve®	110-80-5	240	245	T	nt
Cellosolve® acetate	Ethyl Cellosolve® acetate	111-15-9	240	245	T	nt
CFC 11		75-69-4	260	261	nt	nt
2-Chlorophenol		95-57-8	260 / 310	263 / 316	nt	nt
3-Chlorophenol		108-43-0	260 / 310	263 / 316	nt	nt
4-Chlorophenol		106-48-9	260 / 310	263 / 316	T	nt
o-Chlorophenol		95-57-8	260 / 310	263 / 316	nt	nt
p-Chlorophenol	4-Chlorophenol	106-48-9	260 / 310	263 / 316	T	nt
Chlorophenol, mixture of 2-, 3-, 4-		mixture	260 / 310	263 / 316	nt	nt
Chloropicrin		76-06-2	260	261	T	nt
Chloroprene	2-Chloro-1,3-butadiene	126-99-8	260	264	T	nt
1-Chloropropane		540-54-5	260	261	nt	nt
1-Chloro-2-propanol		127-00-4	260 / 310	261 / 315	nt	nt
3-Chloro-1-propanol		627-30-5	260 / 310	261 / 315	nt	nt
3-Chloropropene	Allyl chloride	107-05-1	260	265	T	nt
3-Chloropropronitrile		542-76-7	260 / 430	261 / 431	nt	nt
Chloropyrifos		2921-88-2	460	462	T	nt
Chlorosulfonic acid		7790-94-5	370 / 500	370 / 504	T	T
a-Chlorotoluene	Benzyl chloride	100-44-7	260	266	T	nt
o-Chlorotoluene		95-49-8	260	263	T	nt
2-Chlorovinylarsine dichloride	Lewisite	541-25-3	470 / 595	470 / 595	T	nt
Chromic acetate		1066-30-4	550	550	nt	nt
Chromic acid		1333-82-0	370	370	T	T
Chromic anhydride	Chromic acid	1333-82-0	370	370	T	nt
Chromic sulfate		10101-53-8	340	340	nt	nt
Chromium oxide	Chromic acid	1333-82-0	370	370	T	nt
Chrysene		218-01-9	290	293	nt	nt
Citric acid		77-92-9	100	104	nt	nt
Coal naphtha	Benzene	71-43-2	290	292	T	nt
Copper cyanide		544-92-3	345	345	nt	nt
Creosote		8001-58-9	310	316	T	nt
Cresol, mixed isomers		1319-77-3	310	316	T	nt
m-Cresol		108-39-4	310	316	nt	nt

Chemical Name	Name in Data Table (if Synonym)	CAS Number	Class	Sub-Class	Limited Use	Re-usable
Cumene peroxide		80-43-3	300	300	nt	nt
Cupric sulfate		7758-98-7	340	340	nt	nt
Cuprous cyanide		544-92-3	345	345	nt	nt
Cyanamide		420-04-2	345	345	nt	nt
Cyanex®		mixture	460	461	nt	T
Cyanide	Hydrogen cyanide	74-90-8	345 / 370	345 / 370	T	nt
Cyanizine		21725-46-2	270 / 430	274 / 431	nt	nt
Cyanoacetic acid		372-09-8	100	103	nt	nt
Cyanogen		460-19-5	345	345	nt	nt
Cyanogenamide		420-04-2	345	345	nt	nt
Cyanogen bromide		506-68-3	345 / 350	345 / 350	nt	T
Cyanogen bromide 30%		mixture	345 / 350	345 / 350	nt	T
Cyanogen chloride		506-77-4	345	345	nt	nt
Cyanomethylbenzene	Benzyl Cyanide	140-29-4	400	432	T	nt
Cyanuric chloride		108-77-0	260 / 270	263 / 274	T	nt
Cyclohexane		110-82-7	290	291	T	nt
Cyclohexanol		108-93-0	310	312	nt	nt
Cyclohexanone		108-94-1	390	391	T	nt
Cyclohexylamine		108-91-8	140	141	T	nt
Cyclohexyl isocyanate		3173-53-3	210	211	T	nt
Cyclonol		116-02-9	310	312	nt	nt
Cyclooctadiene		1552-12-1	290	296	T	nt
Cyclopentane		287-92-3	290	291	nt	nt
p-Cymene		25155-15-1	290	292	nt	nt
Decahydronaphthalene		91-17-8	290	291	nt	nt
n-Decanal		112-31-2	120	121	nt	nt
Decane		124-18-5	290	291	nt	nt
Decontaminating agent DS-2		mixture	590	590	T	nt
n-Decyl aldehyde		112-31-2	120	121	nt	nt
Diallylamine		124-02-7	140	142	nt	nt
p,p'-Diaminodiphenyl methane	4,4'-Methylene dianiline	101-77-9	140	145 / 149	T	nt
Di-n-amylamine		2050-92-2	140	142	nt	nt
Diazinon		333-41-5	460	462	T	nt
Diborane		19287-45-7	350	350	T	nt

Copyright © 2004 E. I. du Pont de Nemours and Company. All rights reserved.

Chemical Name	Name in Data Table (if Synonym)	CAS Number	Class	Sub-Class	Limited Use	Re-usable
m-Cresol 55%, p-Cresol 30%, Phenol 15%		mixture	310	316	T	nt
o-Cresol		95-48-7	310	316	T	nt
trans-Crotonaldehyde		123-73-9	120	121	T	nt
Crude oil		8002-05-9	290 / 590	294 / 590	T	nt
Cumene		98-82-8	290	292	T	nt
1,2-Dibromoethane	Ethylene dibromide	106-93-4	260	261	T	nt
Dibromomethane		74-95-3	260	261	nt	nt
Di-n-butylamine		111-92-2	140	142	nt	nt
Dibutyl ether	n-Butyl ether	142-96-1	240	241	T	nt
Dibutylphenol		26746-38-3	310	316	nt	nt
Dibutyl phthalate		84-74-2	220	226	nt	nt
Dichloroacetic acid		79-43-6	100	103	nt	nt
1,3-Dichloroacetone		534-07-6	260 / 390	261 / 391	T	nt
Dichloroacetyl chloride		79-36-7	110	111	T	nt
Dichloroacetylene	trans-1,2-Dichloroethylene	156-60-5	260	264	T	nt
3,4-Dichloroaniline		95-76-1	140 / 260	145 / 263	T	nt
1,2-Dichlorobenzene		95-50-1	260	263	nt	nt
3,3'-Dichlorobenzidine		91-94-1	140 / 260	149 / 263	nt	nt
1,4-Dichloro-2-butene		110-57-6	260	264	T	nt
trans-1,4-Dichloro-2-butene		764-41-0	260	264	T	nt
1,1-Dichloroethane		75-34-3	260	261	nt	nt
1,2-Dichloroethane		107-06-2	260	261	T	nt
1,2-Dichloroethene	1,2-Dichloroethylene	540-59-0	260	264	nt	T
1,1-Dichloroethylene	Vinylidene chloride	75-35-4	260	264	T	nt
1,2-Dichloroethylene		540-59-0	260	264	nt	T
Dichloroethylene, all isomers		25323-30-2	260	264	nt	nt
trans-1,2-Dichloroethylene		156-60-5	260	261	T	nt
Dichloroethyl ether		111-44-4	240 / 260	241 / 261	T	nt
Dichloroisopropyl ether		108-60-1	240 / 260	241 / 261	nt	nt
2,3-Dichloro-6-isopropyl-S-triazine		30894-74-7	270	274	T	nt
Dichloromethane		75-09-2	260	261	T	T
sym-Dichloromethyl ether		542-88-1	240 / 260	241 / 261	nt	nt
2,4-Dichlorophenol		120-83-2	260 / 310	263 / 316	nt	nt
1,2-Dichloropropane	Propylene dichloride	78-87-5	260	261	T	nt
1,3-Dichloro-2-propanone	1,3 Dichloroacetone	534-07-6	260 / 390	261 / 391	T	nt

Chemical Name	Name in Data Table (if Synonym)	CAS Number	Class	Sub-Class	Limited Use	Re-usable
1,4-Dibromobutane		110-52-1	260	261	nt	nt
1,2-Dibromo-3-chloropropane		96-12-8	260	261	T	nt
Dichlorotriazine 20%, Toluene 80%		mixture	260	263	T	nt
Diesel fuel		68334-30-5	290	291	T	nt
Diesel automotive test fuel		mixture	290	291	T	nt
Diethanolamine		111-42-2	140	142	T	nt
Diethylamine		109-89-7	140	142	T	T
Diethylaniline crude		91-66-7	140	146	T	nt
Diethyl arsine		692-42-2	470	470	nt	nt
Diethyl carbonate		105-58-8	230	233	nt	nt
2,2'-Diethyldihexylamine		106-20-7	140	142	nt	nt
1,4-Diethylenediamine		110-85-0	270	274	nt	nt
Diethylene dioxide	1,4-Dioxane	123-91-1	270	278	T	nt
Diethylene glycol		111-46-6	310	314	nt	nt
Diethylene glycol monomethyl ether		111-77-3	240	245	nt	nt
Diethylenetriamine		111-40-0	140	148	T	nt
N,N-Diethylethanolamine		100-37-8	140	143	nt	nt
Diethyl ether	Ethyl ether	60-29-7	240	241	T	nt
Di (2-ethylhexyl) phthalate		117-81-7	220	226	T	nt
Diethylhydrazine		1615-80-1	280	280	nt	nt
Diethyl phthalate		84-66-2	220	226	nt	nt
Diethyl sulfate		64-67-5	500	507	T	nt
Diethyl-m-toluidine crude		91-67-8	140	145	T	nt
Dihydrogen Oxide		7732-18-5	590	590	nt	nt
1,4-Diiodo-1,1,2,2-tetrafluorobutane		755-95-3	260	261	T	nt
Diisobutylamine		111-92-2	140	142	nt	nt
Diisobutyl ketone		108-83-8	390	391	nt	nt
Diisobutyl phthalate		84-69-5	220	226	nt	nt
1,6-Diisocyanatohexane	1,6-Hexamethylene diisocyanate	822-06-0	210	211	T	nt
Diisopropylamine		108-18-9	140	142	nt	nt
Dimethoxane		828-00-2	270	278	nt	nt
N,N-Dimethylacetamide		127-19-5	130	132	T	nt
Dimethylamine		124-40-3	140	142	T	nt
2-Dimethyl aminoethanol		108-01-0	140	143	nt	nt

Copyright © 2004 E. I. du Pont de Nemours and Company. All rights reserved.

Chemical Name	Name in Data Table (if Synonym)	CAS Number	Class	Sub-Class	Limited Use	Re-usable
1,3-Dichloropropene		542-75-6	260	261	T	nt
2,3-Dichloropropene		78-88-6	260	261	T	nt
Dichlorosilane		4109-96-0	480	480	T	nt
Dichlorosulfane	Sulfur dichloride	10545-99-0	500	502	T	nt
1,1-Dichlorotetrafluoroethane		374-07-2	260	261	T	nt
Dimethyldichlorosilane		75-78-5	480	480	T	nt
Dimethyl disulfide		624-92-0	500	502	T	nt
Dimethylene oxide	Ethylene oxide	75-21-8	270	275	T	T
Dimethyl ether		115-10-6	240	241	T	nt
N,N-Dimethylformamide		68-12-2	130	132	T	T
1,1-Dimethylhydrazine		57-14-7	280	280	T	nt
Dimethyl maleate		624-48-6	220	224	T	nt
Dimethylmorpholine		141-91-3	140	142	nt	nt
Dimethyl nitrosamine		62-75-9	450	450	T	nt
2,4-Dimethylphenol		105-67-9	310	316	nt	nt
Dimethylphenylamine		1300-73-8	140	145	nt	nt
Dimethyl phthalate		131-11-3	220	226	nt	nt
Dimethyl sulfate		77-78-1	500	507	T	T
Dimethyl sulfide		75-18-3	500	502	T	nt
Dimethyl sulfoxide		67-68-5	500	503	T	nt
Dimethyl terephthalate		120-61-6	220	226	nt	nt
Dimethylvinyl chloride		513-37-1	260	264	nt	nt
Dinitro-o-cresol		534-52-1	310 / 440	316 / 442	T	nt
Dinitrophenol		25550-58-7	310 / 440	316 / 442	nt	nt
Di-n-octyl phthalate		117-84-0	220	226	nt	nt
1,4-Dioxane		123-91-1	270	278	T	nt
Dioxin		1746-01-6	260	263	nt	nt
1,3-Dioxolane		646-06-0	240	241	nt	nt
Dipentene		138-86-3	290	296	nt	nt
Dipentyl amine		2050-92-2	140	142	nt	nt
Diphenylamine		122-39-4	140	146	nt	nt
4,4'-Diphenyl methane diisocyanate		101-68-8	210	212	T	nt
n-Dipropylamine		142-84-7	140	142	nt	nt
Disodium sulfite		7757-83-7	340	340	nt	nt
Disulfur dichloride		10025-67-9	500	502	T	nt
Divinyl benzene		1321-74-0	290	292	nt	nt

Chemical Name	Name in Data Table (if Synonym)	CAS Number	Class	Sub-Class	Limited Use	Re-usable
3-Dimethyl aminopropylamine		109-55-7	140	148	nt	nt
N,N-Dimethylaniline		121-69-7	140	146	T	nt
1,3-Dimethyl butylamine		108-09-8	140	143	nt	nt
tert-Dodecyl mercaptan		25103-58-6	500	501	nt	nt
Dowtherm A		8004-13-5	590	590	T	nt
DuPont Activators with hexamethylene diisocyanate		mixture	210 / 590	211 / 590	T	nt
Epibromohydrin		3132-64-7	270	275	nt	nt
Epichlorohydrin		106-89-8	260 / 270	261 / 275	T	T
1,2-Epoxybutane		106-88-7	270	275	nt	nt
1,2-Epoxyethane	Ethylene oxide	75-21-8	270	275	T	T
Epoxypropane	1,2-Propylene oxide	75-56-9	270	275	T	nt
1,2-Epoxy-3-(tolyoxy)propane		26447-14-3	270	275	nt	nt
Epoxytrichloropropane		67664-94-2	270	275	nt	nt
2,3-epoxy-2,3-dimethylbutane	Tetramethylethylene oxide	5076-20-0	270	275	T	nt
Epsom salts		7487-88-9	340	340	nt	nt
Ethanal	Acetaldehyde	75-07-0	120	121	T	nt
Ethanol		64-17-5	310	311	T	nt
Ethanolamine		141-43-5	140 / 310	141 / 311	T	nt
2-Ethoxyethanol	Ethyl Cellosolve®	110-80-5	240	245	T	nt
2-(2-Ethoxyethoxy) ethanol	Ethylene diglycol monoethyl ether	111-90-0	240	245	T	nt
2-Ethoxyethyl acetate	Ethyl Cellosolve® acetate	111-15-9	240	245	T	nt
Ethyl acetate		141-78-6	220	222	T	T
Ethyl acetoacetate		141-97-9	220	222	nt	nt
Ethyl acrylate		140-88-5	220	223	T	nt
Ethyl alcohol	Ethanol	64-17-5	310	311	T	nt
Ethylamine		75-04-7	140	141	T	nt
Ethyl benzene		100-41-4	290	290	T	nt
Ethyl benzene 80%, 4,6-Dinitro-o-cresol 20%		mixture	590	590	T	nt
Ethyl benzene hydroperoxide		3071-32-7	300	300	T	nt
Ethyl benzoate		93-89-0	220	226	nt	nt
2-Ethylbutylamine		617-79-8	140	141	nt	nt

Copyright © 2004 E. I. du Pont de Nemours and Company. All rights reserved.

Chemical Name	Name in Data Table (if Synonym)	CAS Number	Class	Sub-Class	Limited Use	Re-usable
DMAC	N,N-Dimethyacetamide	127-19-5	130	132	T	nt
DMF	N,N-Dimethylformamide	68-12-2	130	132	T	T
DMSO	Dimethyl sulfoxide	67-68-5	500	503	T	nt
tert-Dodecanethiol		25103-58-6	500	501	nt	nt
Dodecyl benzene sulfonate		25155-30-0	500	507	nt	nt
Ethyl chloride		75-00-3	260	261	T	nt
Ethyl cyanide		107-12-0	345	345	nt	nt
Ethylene		74-85-1	290	294	T	nt
Ethylenediamine		107-15-3	140	148	T	nt
Ethylene dibromide		106-93-4	260	261	T	nt
Ethylene dichloride	1,2-Dichloroethane	107-06-2	260	261	T	nt
Ethylene diglycol monoethyl ether		111-90-0	240	245	T	nt
Ethylene glycol		107-21-1	310	314	T	nt
Ethylene glycol acrylate	Hydroxyethyl acrylate	818-61-1	220	223	T	nt
Ethylene glycol diacetate		111-55-7	220	222	nt	nt
Ethylene glycol monoacetate		542-59-6	220	222	nt	nt
Ethylene glycol monomethyl ether	Methyl Cellosolve® acetate	110-49-6	240	245	T	nt
Ethylene glycol monopropyl ether		2807-30-9	240	245	nt	nt
Ethyleneimine		151-56-4	270	274	T	nt
Ethylene oxide gas		75-21-8	270	275	T	T
Ethylene oxide liquid		75-21-8	270	275	T	T
Ethylene oxide, 10% in HCFC 124		mixture	270	274	T	nt
Ethylenylbenzene	Styrene	100-42-5	290	292	T	nt
Ethyl ether		60-29-7	240	241	T	nt
Ethyl fluoroacetate		459-72-3	220	222	nt	nt
Ethyl hexaldehyde		123-05-7	120	121	nt	nt
2-Ethylhexanoic acid		149-57-5	100	102	nt	nt
2-Ethylhexanol		104-76-7	310	311	nt	nt
2-Ethylhexyl acrylate		103-11-7	220	223	nt	nt
2-Ethylhexylamine		104-75-6	140	141	nt	nt
Ethyl iodide		75-03-6	260	261	nt	nt
Ethyl mercaptan		75-08-1	500	501	nt	nt

Chemical Name	Name in Data Table (if Synonym)	CAS Number	Class	Sub-Class	Limited Use	Re-usable
Ethyl carbamate		51-79-6	230	233	nt	nt
Ethyl Carbitol®	Ethylene diglycol monoethyl ether	111-90-0	240	245	T	nt
Ethyl Cellosolve®		110-80-5	240	245	T	nt
Ethyl Cellosolve® acetate		111-15-9	240	245	T	nt
Ferric chloride		7705-08-0	340	340	T	nt
Ferric fluoride		7783-50-8	340	340	nt	nt
Ferrous chloride		7758-94-3	340	340	T	nt
Fluorene		86-73-7	290	293	nt	nt
Fluorine		7782-41-4	350	350	T	nt
Fluoroacetamide		640-19-7	130	132	nt	nt
Fluorobenzene		462-06-6	260	263	T	nt
Fluoroboric acid		16872-11-0	370	370	T	nt
Fluorosilicic acid		16961-83-4	370	370	T	nt
Fluorosulfonic acid		7789-21-1	370	370	T	nt
Fluorosulfuric acid	Fluorosulfonic acid	7789-21-1	370	370	T	nt
Fluosilicic acid	Fluorosilicic acid	16961-83-4	370	370	T	nt
Formaldehyde		50-00-0	120	121	T	nt
Formalin		50-00-0	120	121	T	nt
Formamide		75-12-7	130	132	nt	nt
Formic acid		64-18-6	100	102	T	T
Fuel oil		mixture	290	291	T	nt
Fuel Oil #2	Diesel fuel	68334-30-5	290	291	T	nt
Fuming sulfuric acid	Oleum	8014-95-7	370	370	T	nt
2-Furaldehyde		98-01-1	120 / 270	122 / 277	T	T
Furan		110-00-9	270	277	nt	nt
2-Furancarbonal	2-Furaldehyde	98-01-1	120 / 270	122 / 277	T	T
2-Furancarboraldehyde	2-Furaldehyde	98-01-1	120 / 270	122 / 277	T	T
Furfural	2-Furaldehyde	98-01-1	120 / 270	122 / 277	T	T
Furfuryl alcohol		98-00-0	310	318	nt	nt
2-Furyl methanol		98-00-0	310	318	nt	nt
GA	Tabun	77-81-6	460 / 595	462 / 595	T	nt
gamma-Butyrolactone	Butyrolactone	96-48-0	220	225	T	nt
Gasoline		86290-81-5	290	291 / 292	T	nt
GB	Sarin	107-44-8	460 / 595	462 / 595	T	nt
GD	Soman	96-64-0	460 / 595	462 / 595	T	nt
Glade Intech 200		unk	590	590	T	nt
Glutaraldehyde		111-30-8	120	121	T	nt

Copyright © 2004 E. I. du Pont de Nemours and Company. All rights reserved.

Chemical Name	Name in Data Table (if Synonym)	CAS Number	Class	Sub-Class	Limited Use	Re-usable
Ethyl methacrylate		97-63-2	220	223	T	nt
Ethyl methanesulfonate		62-50-0	500	507	nt	nt
Ethyl parathion		56-38-2	460	462	T	nt
Ethylphenol		90-00-6	310	316	nt	nt
2-Ethyltoluene		611-14-3	290	292	nt	nt
Ethyl vinyl ether		109-92-2	240 / 260	246 / 261	T	nt
Glycol monobutyl ether	Butyl Cellosolve®	111-76-2	240	245	T	nt
Glycol monoethyl ether acetate	Ethyl Cellosolve® acetate	111-15-9	240	245	T	nt
Grain alcohol	Ethanol	64-17-5	310	311	T	nt
Green liquor		68131-30-6	590	590	T	T
Guthion ethyl	Azinphos ethyl	2642-71-9	460	462	T	nt
Halothane		151-67-7	260	261	nt	nt
HD	Sulfur mustard	505-60-2	500 / 595	502 / 595	T	nt
Heating oil	Diesel fuel	68334-30-5	290	291	T	nt
n-Heptane		142-82-5	290	291	T	nt
Hexachlorobenzene		118-74-1	260	263	nt	nt
Hexachlorobutadiene		87-68-3	260	264	T	nt
Hexachlorocyclo-pentadiene		77-47-4	260	264	T	nt
Hexachloroethane		67-72-1	260	261	nt	nt
1,1,1,3,3,3-Hexachloropropane		3607-78-1	260	264	T	nt
Hexachloropropene		1888-71-7	260	264	nt	nt
Hexafluoroethane		76-16-4	260	261	T	nt
Hexafluoroisobutylene		382-10-5	260	261	T	nt
Hexaldehyde		66-25-1	120	121	nt	nt
Hexamethyldisilizane		999-97-3	140 / 480	142 / 480	T	nt
Hexamethylene diamine		124-09-4	140	148	T	nt
Hexamethylene diisocyanate		822-06-0	210	211	T	nt
Hexamethylene diisocya-nate in DuPont Activators		mixture	590	590	T	nt
Hexamethylenetriamine		100-97-0	270	274	nt	nt
Hexamine		100-97-0	270	274	nt	nt
1-Hexanal		66-25-1	120	121	nt	nt
n-Hexane		110-54-3	290	291	T	T
1-Hexene		592-41-6	290	294	T	nt

Chemical Name	Name in Data Table (if Synonym)	CAS Number	Class	Sub-Class	Limited Use	Re-usable
Glycerine		56-81-5	310	314	T	nt
Glycerol	Glycerine	56-81-5	310	314	T	nt
Glycidaldehyde		765-34-4	270	275	nt	nt
Glycolic acid, sat. sol. in water		79-14-1	100	103	T	nt
Hydrazobenzene		122-66-7	280	280	nt	nt
Hydriodic acid		10034-85-2	370	370	T	nt
Hydriodic ether		75-03-6	260	261	nt	nt
Hydrobromic acid		10035-10-6	370	370	T	nt
Hydrochloric acid		7647-01-0	370	370	T	T
Hydrocyanic acid	Hydrogen cyanide liquid	74-90-8	345 / 370	345 / 370	T	T
Hydrofluoric acid		7664-39-3	370	370	T	T
Hydrofluorosilicic acid	Fluorosilicic acid	16961-83-4	370	370	T	nt
Hydrogen bromide		10035-10-6	350 / 370	350 / 370	T	nt
Hydrogen chloride gas		7647-01-0	350	350	T	T
Hydrogen cyanide gas		74-90-8	345 / 350	345 / 350	T	T
Hydrogen cyanide liquid		74-90-8	345 / 370	345 / 370	T	T
Hydrogen fluoride gas		7664-39-3	350	350	T	T
Hydrogen fluoride liquid		7664-39-3	350 / 370	350 / 370	T	T
Hydrogen peroxide		7722-84-1	300	300	T	T
Hydrogen selenide		7783-07-5	350	350	T	nt
Hydrogen sulfide		7783-06-4	350 / 500	350 / 502	T	nt
Hydroquinone		123-31-9	310	316	nt	nt
Hydrosilicofluoric acid	Fluorosilicic acid	1696-83-4	370	370	T	nt
Hydroxybenzene	Phenol	108-95-2	310	316	T	nt
Hydroxyethyl acrylate		818-61-1	220	223	T	nt
Hydroxylamine sulfate		10039-54-0	500	507	nt	nt
1-Hydroxy-2-Phenylethane	2-Phenylethanol	60-12-8	310	318	T	nt
1-Hydroxy-2-Phenylethane	1-Phenylethanol	98-85-1	310	318	T	nt
Hypophosphorus acid		6303-21-5	370	370	T	nt
Iodine		7553-56-2	330	330	T	nt
Iodine, molten		7553-56-2	330	330	nt	T
Iodomethane	Methyl iodide	74-88-4	260	261	T	nt
Isoamyl alcohol		123-51-3	310	312	T	nt
Isobutane		75-28-5	290	291	T	nt
Isobutanol		78-83-1	310	311	T	nt
Isobutyl acrylate		106-63-8	220	223	nt	nt
Isobutyl alcohol	Isobutanol	78-83-1	310	311	T	nt

Copyright © 2004 E. I. du Pont de Nemours and Company. All rights reserved.

Chemical Name	Name in Data Table (if Synonym)	CAS Number	Class	Sub-Class	Limited Use	Re-usable
Hexyl alcohol		111-27-3	310	311	nt	nt
HF	Hydrogen fluoride	7664-39-3	350	350	T	T
HMDI	1,6-Hexamethylene diisocyanate	822-06-0	210	211	T	nt
Hydrazine		302-01-2	280	280	T	T
Hydrazine hydrate		10217-52-4	280	280	T	nt
Isopentane		78-78-4	290	291	nt	nt
Isopentyl alcohol	Isoamyl alcohol	123-51-3	310	311	T	nt
Isophorone		78-59-1	390	391	nt	nt
Isophorone diisocyanate		4098-71-9	210	211	T	nt
Isoprene		78-79-5	290	296	T	nt
Isopropanol		67-63-0	310	312	T	nt
Isopropyl acetate		108-21-4	220	222	nt	nt
Isopropyl alcohol	Isopropanol	67-63-0	310	312	T	nt
Isopropylamine		75-31-0	140	141	T	nt
Isopropyl benzene	Cumene	98-82-8	290	292	T	nt
Isopropyl chloride		75-29-6	260	261	nt	nt
Isopropyl ether		108-20-3	240	241	nt	nt
4,4'-Isopropylidine diphenol		80-05-7	310	316	nt	nt
Isopropyl methacrylate		4655-34-9	220	223	nt	nt
Isopropyl methane-fluorophosphonate	Sarin	107-44-8	460 / 595	462 / 595	T	nt
Isovaleraldehyde		590-86-3	120	121	nt	nt
Jet A fuel		8008-20-6	290	291	T	nt
JP-4 jet fuel		mixture	290	291	T	nt
JP-8 jet fuel		8008-20-6	290	291	T	nt
Kerosene		8008-20-6	290	291	T	nt
L	Lewisite	541-25-3	470 / 595	470 / 595	T	nt
Lactic acid		50-21-5	100	103	nt	nt
Lannate® LV	Methomyl	16752-77-5	230	233	T	nt
Lauric acid		143-07-7	100	102	nt	nt
Lead fluoroborate		13814-96-5	340	340	nt	nt
Lead sulfate		7446-14-2	340	340	nt	nt
Lewisite (L) Chemical Agent		541-25-3	470 / 595	470 / 595	T	nt
Ligroine	VM&P naphtha	8032-32-4	290	291	T	nt

Chemical Name	Name in Data Table (if Synonym)	CAS Number	Class	Sub-Class	Limited Use	Re-usable
Isobutylamine		78-81-9	140	141	nt	nt
Isobutylbenzene		538-93-2	290	292	T	nt
Isobutyl nitrite		542-56-3	430	431	nt	nt
Isobutyraldehyde		78-84-2	120	121	nt	nt
Isoctaldehyde		63885-09-6	120	121	nt	nt
Isocyanuric chloride		87-90-1	270	274	nt	nt
Isooctane		592-27-8	290	291	nt	nt
Lithium hydroxide		1310-65-2	380	380	T	nt
Lupranate®	Polymethylene polyphenylpolyisocyanate	9106-87-9	210	212	T	nt
Magnesium sulfate		7487-88-9	340	340	nt	nt
Malathion		121-75-5	460	462	T	nt
Maleic acid		110-16-7	100	104	T	nt
Maleic anhydride		108-31-6	160	161	T	nt
Malic acid		6915-15-7	100	104	nt	nt
MDA	4,4'-Methylene dianiline	101-77-9	140	145 / 149	T	nt
MEK	Methyl ethyl ketone	78-93-3	390	391	T	nt
p-Mentha-1,8-diene	d-Limonene	5989-27-5	290	296	T	nt
Mercaptoacetic acid	Thioglycolic acid	68-11-1	100 / 500	103 / 501	T	nt
Mercuric chloride		7487-94-7	340	340	T	nt
Mercuric cyanide		592-04-1	345	345	nt	nt
Mercury		7439-97-6	330	330	T	nt
Mesityl oxide		141-79-7	390	391	T	nt
Mesyl Chloride	Methanesulfonyl Chloride	124-63-0	500	505	T	nt
Methacrylamide		79-39-0	130	135	nt	nt
Methacrylic acid		79-41-4	100	102	T	nt
Methacrylonitrile		126-98-7	430	431	nt	nt
Methane		74-82-8	290	291	T	nt
Methanesulfonic acid		75-75-2	500	504	T	nt
Methanesulfonyl Chloride		124-63-0	500	505	T	nt
Methanethiol	Methyl mercaptan	74-93-1	500	501	T	nt
Methanoic acid	Formic acid	64-18-6	100	102	T	T
Methanol		67-56-1	310	311	T	T
Methomyl		16752-77-5	230	233	T	nt
2-Methoxyethanol	Methyl Cellosolve®	109-86-4	240	245	T	nt
2-Methoxyethyl acetate	Methyl Cellosolve® acetate	110-49-6	240	245	T	nt

Copyright © 2004 E. I. du Pont de Nemours and Company. All rights reserved.

Chemical Name	Name in Data Table (if Synonym)	CAS Number	Class	Sub-Class	Limited Use	Re-usable
Lime hydrate		1305-62-0	380	380	nt	nt
d-Limonene		5989-27-5	290	296	T	nt
Lindane		58-89-9	260	261	T	nt
Linoleic acid		60-33-3	100	102	nt	nt
Lithium chloride		7447-41-8	340	340	T	nt
Lithium chromate		14307-35-8	340	340	nt	nt
N-Methylaniline		100-61-8	140	146	nt	nt
2-Methylbenzenethiol		137-06-4	500	501	nt	nt
Methyl bromide		74-83-9	260	261	T	nt
N-methylformamide		123-39-7	130	132	T	nt
Methyl tert-butyl ether		1634-04-4	240	241	T	nt
Methyl n-butyl ketone		591-78-6	390	391	nt	nt
Methyl carbitol		111-77-3	240	245	nt	nt
Methyl Cellosolve®		109-86-4	240	245	T	nt
Methyl Cellosolve® acetate		110-49-6	240	245	T	nt
Methyl chloride		74-87-3	260	261	T	T
Methyl chloroacetate		96-34-4	220	222	nt	nt
Methyl chloroform	1,1,1-Trichloroethane	71-55-6	260	261	T	nt
Methyl chloroformate		79-22-1	110	113	T	nt
Methylene bis (cyclohexylisocyanate)		5124-30-1	210	211	nt	nt
4,4'-Methylene bis (o-chloroaniline)		101-14-4	140	149	T	nt
Methylene bromide		74-95-3	260	261	T	nt
Methylene chloride	Dichloromethane	75-09-2	260	261	T	T
4,4'-Methylene dianiline		101-77-9	140	145 / 149	T	nt
N-Methylethanolamine		109-83-1	140	142	nt	nt
Methyl ether	Dimethyl ether	115-10-6	240	241	T	nt
Methyl ethyl ketone		78-93-3	390	391	T	nt
Methyl ethyl ketone peroxide		1338-23-4	300	300	nt	nt
Methyl ethyl ketoxime		96-29-7	590	590	T	nt
Methyl ethyl pyridine		104-90-5	270	271	nt	nt
Methyl fluoride		593-53-3	260	261	T	nt
Methyl formate		107-31-3	220	221	T	nt
2-Methylglutaronitrile		4553-62-2	430	431	T	nt
Methylhydrazine		60-34-4	280	280	T	nt

Chemical Name	Name in Data Table (if Synonym)	CAS Number	Class	Sub-Class	Limited Use	Re-usable
1-Methoxy-2-propanol		107-98-2	240	245	nt	nt
Methyl acetate		79-20-9	220	222	nt	nt
Methyl acrylate		96-33-3	220	223	T	nt
Methylacrylic acid		777-77-7	300	300	nt	nt
2-Methylactonitrile	Acetone cyanohydrin	75-86-5	310 / 430	313 / 431	T	nt
Methyl alcohol	Methanol	67-56-1	310	311	T	T
Methylamine		74-89-5	140	141	T	nt
Methyl aminopropylamine		6291-84-5	140	148	nt	nt
2-Methylaniline	o-Toluidine	95-53-4	140	145	T	nt
Methyl parathion		298-00-0	460	462	T	nt
2-Methyl-1,5-pentanedinitrile	Methylglutaronitrile	4553-62-2	430	431	T	nt
4-Methyl-2-pentanone	Methyl isobutyl ketone	108-10-1	390	391	T	nt
2-Methyl-1,3-propanediol		2163-42-0	310	314	T	nt
2-Methyl-2-propanethiol		75-66-1	500	501	nt	nt
2-Methyl-1-propanol	Isobutanol	78-83-1	310	311	T	nt
2-Methylpropenoic acid	Methacrylic acid	79-41-4	100	102	T	nt
2-Methyl pyridine	2-Picoline	109-06-8	270	271	T	nt
n-Methyl-2-pyrrolidone		872-50-4	130	132	T	nt
Methyl salicylate		119-36-8	220	226	T	nt
Methylsulfonyl Chloride	Methanesulfonyl Chloride	124-63-0	500	505	T	nt
Methylstyrene		25013-15-4	290	292	nt	nt
Methyl sulfate		75-93-4	500	507	nt	nt
Methyl sulfide	Dimethyl sulfide	75-18-3	500	502	T	nt
Methyl Sulfochloride	Methanesulfonyl Chloride	124-63-0	500	505	T	nt
Methyl sulfoxide	Dimethyl sulfoxide	67-68-5	500	503	T	nt
Methyl trichlorosilane		75-79-6	480	480	T	nt
Methyltriglycol		112-35-6	240	245	nt	nt
Mineral oil		8012-95-1	290	291	T	nt
Mineral spirits		64475-85-0	290	291	T	nt
Monoethanolamine	Ethanolamine	141-43-5	140 / 310	141 / 311	T	nt
Monomethylamine	Methylamine	74-89-5	140	141	T	nt
Monomethylhydrazine	Methylhydrazine	60-34-4	280	280	T	nt
Morpholine		110-91-8	140	142	T	nt
MTBE	Methyl-t-butyl ether	1634-04-4	240	241	T	nt
Muriatic acid	Hydrochloric acid	7647-01-0	370	370	T	T
Mustard gas	Sulfur mustard	505-60-2	500 / 595	502 / 595	T	nt
Naphtha		8030-30-6	290	291	T	nt

Copyright © 2004 E. I. du Pont de Nemours and Company. All rights reserved.

Chemical Name	Name in Data Table (if Synonym)	CAS Number	Class	Sub-Class	Limited Use	Re-usable
Methyl iodide		74-88-4	260	261	T	T
Methyl isobutyl carbinol		108-11-2	310	312	nt	nt
Methyl isobutyl ketone		108-10-1	390	391	T	nt
Methyl isocyanate		624-83-9	210	211	T	nt
Methyl mercaptan		74-93-1	500	501	T	nt
N-Methyl methacrylamide		3887-02-3	130	135	T	nt
Methyl methacrylate		80-62-6	220	223	T	nt
o-Nitrochlorobenzene		88-73-3	260 / 440	263 / 442	T	nt
p-Nitrochlorobenzene		100-00-5	260 / 440	263 / 442	T	nt
Nitroethane		79-24-3	440	441	nt	nt
Nitrogen dioxide		10102-44-0	350	350	T	nt
Nitrogen tetroxide		10544-72-6	350	350	T	nt
Nitrogen trifluoride		7783-54-2	350	350	T	nt
Nitroglycerine		55-63-0	440	442	nt	nt
Nitromethane		75-52-5	440	441	T	nt
2-Nitrophenol		88-75-5	310 / 440	316 / 442	T	nt
1-Nitropropane		108-03-2	440	441	nt	nt
2-Nitropropane		79-46-9	440	441	T	nt
Nitrosyl chloride		2696-92-6	350	350	nt	nt
Nitrotoluene, mixture		1321-12-6	440	442	nt	nt
m-Nitrotoluene		99-08-1	440	442	nt	nt
o-Nitrotoluene		88-72-2	440	442	T	nt
p-Nitrotoluene		99-99-0	440	442	T	nt
Nitrous oxide		10024-97-2	350	350	T	nt
Nonylamine		112-20-9	140	141	T	nt
n-Nonyl phenol		25154-52-3	310	316	nt	nt
5-Norbornene-2-yl acetate		6143-29-9	220	222	T	nt
5-Norbornene-2-ol acetate	5-Norbornene-2-yl acetate	6143-29-9	220	222	T	nt
n-Octane		111-65-9	290	291	T	nt
Octanoic acid		124-07-2	100	102	T	nt
1-Octanol		111-87-5	310	311	nt	nt
n-Octanol		111-87-5	310	311	nt	nt
n-Octylamine		111-86-4	140	141	nt	nt
Oleic acid		112-80-1	100	102	nt	nt
Oleum		8014-95-7	370	370	T	T
Organo-Tin Paint		mixture	470	470	T	nt
Orthoarsenic acid		1303-28-2	365	365	nt	nt
Otto Fuel II		106602-80-6	590	590	T	nt

Chemical Name	Name in Data Table (if Synonym)	CAS Number	Class	Sub-Class	Limited Use	Re-usable
Naphthalene		91-20-3	290	293	T	nt
Naphthylamine		134-32-7	140	145	nt	nt
Nerve gas	Sarin	107-44-8	460 / 595	462 / 595	T	nt
Nickel carbonyl		13463-39-3	470	470	T	nt
Nickel chloride		7718-54-9	340	340	nt	nt
Nickel cyanide		557-19-7	345	345	nt	nt
Nicotine		54-11-5	270	271	T	nt
Nitric acid		7697-37-2	370	370	T	T
Nitric acid, red fuming		52583-42-3	370	370	T	nt
Nitric oxide		10102-43-9	350	350	T	nt
Nitrobenzene		98-95-3	440	441	T	T
Paraformaldehyde		30525-89-4	120	121	nt	nt
Paraldehyde		123-63-7	120	121	nt	nt
Paraphenylene diisocyanate (PPDI) crude		104-49-4	210	212	T	nt
Parathion	Ethyl parathion	56-38-2	460	462	T	nt
PCB		11097-69-1	260	263	T	nt
Pentachloroethane		76-01-7	260	261	nt	nt
Pentachlorophenol		87-86-5	310	316	T	nt
1,3-Pentadiene		504-60-9	290	296	nt	nt
1,5-Pentanediamine		462-94-2	140	148	nt	nt
2-Pentanol		6032-29-7	310	312	nt	nt
n-Pentanol		71-41-0	310	311	nt	nt
2-Pentenenitrile		25899-50-7	430	431	T	T
cis-2-Pentenenitrile		13284-42-9	430	431	T	T
3-Pentenenitrile		4635-87-4	430	431	T	nt
Perchloric acid		7601-90-3	370	370	T	nt
Perchloroethylene	1,1,2,2-Tetrachloroethylene	127-18-4	260	264	T	T
Perclene	1,1,2,2-Tetrachloroethylene	127-18-4	260	261	T	nt
Peroxyacetic acid		79-21-0	300	300	nt	nt
Petroleum distillate	JP-8 jet fuel	94114-58-6	290	291	T	nt
Petroleum ether	VM&P Naphtha	8030-32-4	290	291	T	nt
Petroleum spirits	Mineral spirits	64475-85-0	290	291	T	nt
Phenanthrene		85-01-8	290	293	nt	nt
Phenanthrin		85-01-8	290	293	nt	nt

Copyright © 2004 E. I. du Pont de Nemours and Company. All rights reserved.

Chemical Name	Name in Data Table (if Synonym)	CAS Number	Class	Sub-Class	Limited Use	Re-usable
Oxalic acid		144-62-7	100	104	T	nt
Oxalic acid dihydrate		6153-56-6	100	104	T	nt
Oxamyl		23135-22-0	130	137	nt	nt
Oxybismethane	Dimethyl ether	115-10-6	240	241	T	nt
4,4'-Oxydianiline		101-80-4	140	149	nt	nt
Palmitic acid		57-10-3	100	102	nt	nt
Parabromofluorobenzene	4-Bromofluorobenzene	460-00-4	260	263	T	nt
Parachlorobenzotrichloride	4-Benzotrichloride	5216-25-1	260	263	T	nt
Parachlorobenzotrifluoride	4-Clorobenzotrifluoride	98-56-6	260	263	T	nt
Phenyl trichlorosilane	Trichlorophenylsilane	98-13-5	480	480	T	nt
Phosgene		75-44-5	350	350	T	T
Phosphine		7803-51-2	350	350	T	nt
Phosphoric acid		7664-38-2	370	370	T	T
Phosphoric anhydride		1314-56-3	370	370	nt	nt
Phosphorus oxychloride		10025-87-3	360	360	T	nt
Phosphorus pentoxide		1314-56-3	370	370	nt	nt
Phosphorus trichloride		7719-12-2	360	360	T	nt
Phosphoryl chloride	Phosphorus oxychloride	10025-87-3	360	360	T	nt
2-Picoline		109-06-8	270	271	T	nt
3-Picoline		108-99-6	270	271	T	nt
alpha-Picoline	2-Picoline	109-06-8	270	271	T	nt
Picric acid		88-89-1	310 / 440	316 / 440	nt	nt
Piperazine		110-85-0	270	274	nt	nt
Piperidine		110-89-4	270	274	nt	nt
Polychlorinated biphenyls	PCB	11097-69-1	260	263	T	nt
Polymethylene poly-phenylpolyisocyanate		9106-87-9	210	212	T	nt
Potash	Potassium carbonate	584-08-7	340	340	T	nt
Potassium acetate		127-08-2	340	340	T	nt
Potassium binoxalate	Potassium acetate	127-08-2	340	340	T	nt
Potassium carbonate		584-08-7	340	340	T	nt
Potassium chloride		3811-04-9	340	340	nt	nt
Potassium chromate		7789-00-6	340	340	T	nt
Potassium cyanide		151-50-8	345	345	T	nt
Potassium fluoride		7789-23-3	340	340	nt	nt
Potassium hydroxide		1310-58-3	380	380	T	nt
Potassium oxalate		583-52-8	340	340	nt	nt
Potassium permanganate		7722-64-7	340	340	T	nt

Chemical Name	Name in Data Table (if Synonym)	CAS Number	Class	Sub-Class	Limited Use	Re-usable
1-Phenethanol	1-Phenylethanol	98-85-1	310	318	T	nt
2-Phenethanol	2-Phenylethanol	60-12-8	310	318	T	nt
Phenol		108-95-2	310	316	T	T
Phenyl bromide		108-86-1	260	263	nt	nt
m-Phenylenediamine		108-45-2	140	149	nt	nt
Phenethyl alcohol	2-Phenylethanol	60-12-8	310	318	T	nt
1-Phenethyl Alcohol	1-Phenylethanol	98-85-1	310	318	T	nt
2-Phenethyl Alcohol	2-Phenylethanol	60-12-8	310	318	T	nt
Phenylacetonitrile	Benzyl Cyanide	140-29-4	430	432	T	nt
1-Phenylethanol		98-85-1	310	318	T	nt
2-Phenylethanol		60-12-8	310	318	T	nt
a-Phenylethyl alcohol	1-Phenylethanol	98-85-1	310	318	T	nt
Phenylethylene	Styrene	100-42-5	290	292	T	nt
Phenyl glycidyl ether		122-60-1	270	275	T	nt
Phenyl hydrazine		100-63-0	280	280	nt	T
Phenyl hydroxide	Phenol	108-95-2	310	316	T	nt
Phenyl isocyanate		103-71-9	210	212	T	nt
Phenyl mercaptan		108-98-5	500	501	T	nt
Propionic acid		79-09-4	100	102	T	nt
Propionic anhydride		123-62-6	160	161	nt	
Propionyl chloride		79-03-8	110	111	nt	nt
2-Propoxyethanol		2807-30-9	240	245	nt	nt
Propyl acetate		109-60-4	220	222	nt	nt
n-Propyl alcohol	n-Propanol	71-23-8	310	311	T	nt
n-Propylamine		107-10-8	140	141	T	nt
Propyl Cellosolve®		2807-30-9	240	245	T	nt
Propyl chloride		540-54-5	260	261	nt	nt
Propylene chloride	Propylene dichloride	78-87-5	260	261	T	nt
Propylene diamine		78-90-0	140	148	nt	nt
Propylene dichloride		78-87-5	260	261	T	nt
Propylene glycol		57-55-6	310	314	T	nt
Propyleneimine		75-55-8	270	274	nt	nt
1,2-Propylene oxide		75-56-9	270	275	T	nt
Propyl methacrylate		2210-28-8	220	223	nt	T
Prussic acid	Hydrogen cyanide liquid	74-90-8	345 / 470	345 / 470	T	nt
Pyrene		129-00-0	290	293	nt	nt
Pyridine		110-86-1	270	271	T	T
Pyromucic aldehyde	2-Furaldehyde	98-01-1	120 / 270	122 / 277	T	nt

Copyright © 2004 E. I. du Pont de Nemours and Company. All rights reserved.

Chemical Name	Name in Data Table (if Synonym)	CAS Number	Class	Sub-Class	Limited Use	Re-usable
Potassium persulfate		7727-21-1	340	340	nt	nt
PPDI	Paraphenylene diisocyanate	104-49-4	210	212	T	nt
Propane		74-98-6	290	291	T	nt
n-Propanol		71-23-8	310	311	T	nt
Propanoyl chloride		79-03-8	110	111	nt	nt
2-Propenamide	Acrylamide	79-06-1	130	135	T	nt
2-Propenoic acid	Acrylic acid	79-10-7	100	102	T	nt
Propionaldehyde		123-38-6	120	121	T	nt
Sodium chloride		7647-14-5	340	340	nt	nt
Sodium cyanide		143-33-9	345	345	T	nt
Sodium dichromate		10588-01-9	340	340	T	nt
Sodium fluoride		7681-49-4	340	340	T	nt
Sodium hydrosulfide		16721-80-5	340	340	T	nt
Sodium hydroxide		1310-73-2	380	380	T	T
Sodium hypochlorite		7681-52-9	340	340	T	nt
Sodium methylate		124-41-4	550	550	T	nt
Sodium persulfate		7775-27-1	340	340	nt	nt
Sodium phosphate		7601-54-9	340	340	nt	nt
Sodium sulfate		7757-82-6	340	340	nt	nt
Sodium sulfide		1313-82-2	340	340	nt	nt
Sodium sulfite		7757-83-7	340	340	nt	nt
Soman (GD)		96-64-0	460 / 595	462 / 595	T	nt
Stearic acid		57-11-4	100	102	nt	nt
Stoddard solvent		8052-41-3	290	291	T	nt
Styrene		100-42-5	290	292	T	nt
Sulfinyl chloride	Thionyl chloride	7719-09-7	360	360	T	nt
Sulfonyl chloride	Sulfuryl chloride	7791-25-5	350 / 360	350 / 360	T	nt
Sulfur chloride	Sulfur dichloride	10545-99-0	500	502	T	nt
Sulfur dichloride		10545-99-0	500	502	T	nt
Sulfur dioxide		7446-09-5	350 / 365	350 / 365	T	nt
Sulfur hexafluoride		2551-62-4	350 / 500	350 / 509	T	nt
Sulfuric acid		7664-93-9	370	370	T	T
Sulfuric acid, fuming	Oleum	8014-95-7	370	370	T	T
Sulfur monochloride	Disulfur dichloride	10025-67-9	500	502	T	nt
Sulfur mustard (HD) chemical agent		505-60-2	500 / 595	502 / 595	T	nt

Chemical Name	Name in Data Table (if Synonym)	CAS Number	Class	Sub-Class	Limited Use	Re-usable
Pyrrole		109-97-7	270	274	nt	nt
Pyrrolidine		123-75-1	270	274	T	nt
Quick silver	Mercury	7439-97-6	330	330	T	nt
Quinoline		91-22-5	270	274	nt	nt
Red fuming nitric acid	Nitric acid, red fuming	7697-37-2	370	370	T	nt
Resorcinol		108-46-3	310	316	nt	nt
Sarin		107-44-8	460 / 595	462 / 595	T	nt
Selenious acid		7783-00-8	370	370	nt	nt
Silane		7803-62-5	480	480	T	nt
Silicon tetrachloride		10026-04-7	360 / 480	360 / 480	T	nt
Silicon tetrahydride	Silane	7803-62-5	480	480	T	nt
Skydrol®		95660-51-8	460	462	T	nt
Sodium-t-amylate / t-amyl alcohol		mixture	590	590	T	nt
Sodium arsenite		15120-17-9	340	340	nt	nt
Sodium bicarbonate		144-55-8	340	340	nt	nt
Sodium bisulfite		7631-90-5	340	340	nt	nt
Sodium carbonate		497-19-8	340	340	nt	nt
Tannic acid		1401-55-4	310	316	nt	nt
TDI	Toluene-1,3-diisocyanate	26471-62-5	210	212	T	nt
Terephthalic acid methyl ester		120-61-6	220	226	nt	nt
1,1,2,2-Tetrabromoethane		79-27-6	260	261	T	nt
2,2', 6,6'-Tetrachlorobisphenol A		79-95-8	260 / 310	263 / 316	T	nt
1,1,1,2-Tetrachloroethane		630-20-6	260	261	nt	nt
1,1,2,2-Tetrachloroethane		79-34-5	260	261	T	T
1,1,2,2-Tetrachloroethylene		127-18-4	260	264	T	nt
Tetraethoxysilane		78-10-4	480	480	T	nt
Tetraethylene pentamine		112-57-2	140	148	nt	nt
Tetraethyl lead		78-00-2	470	470	T	nt
1,1,1,2-Tetrafluoroethane		811-97-2	260	261	T	nt
Tetrafluoroethylene		116-14-3	260	264	nt	nt
Tetrafluoromethane		75-73-0	260	261	T	T
Tetrahydrofuran		109-99-9	240	241	T	nt
Tetralone		529-34-0	290	292	T	nt

Copyright © 2004 E. I. du Pont de Nemours and Company. All rights reserved.

Chemical Name	Name in Data Table (if Synonym)	CAS Number	Class	Sub-Class	Limited Use	Re-usable
Sulfurous acid		7782-99-2	370	370	nt	nt
Sulfurous anhydride	Sulfur dioxide	7446-09-5	350 / 365	350 / 365	T	nt
Sulfurous chloride	Thionyl chloride	7719-09-7	360	360	T	nt
Sulfurous oxide	Sulfur dioxide	7446-09-5	350 / 365	350 / 365	T	nt
Sulfurous oxychloride	Thionyl chloride	7719-09-7	360	360	T	nt
Sulfur oxide	Sulfur dioxide	7446-09-5	350 / 365	350 / 365	T	nt
Sulfur trioxide		7446-11-9	365	365	T	T
Sulfuryl chloride		7791-25-5	350 / 360	350 / 360	T	nt
Tabun		77-81-6	460 / 595	462 / 595	T	nt
Toluene-2,4-diisocyanate		584-84-9	210	212	T	nt
p-Toluenesulfonic acid monohydrate		6192-52-5	500	504	T	nt
o-Toluenethiol		137-06-4	500	501	nt	nt
m-Toluidine		108-44-1	140	145	T	nt
o-Toluidine		95-53-4	140	145	T	nt
Tolyl glycidyl ether		26447-14-3	270	275	nt	nt
2-Tolyl mercaptan		137-06-4	500	501	nt	nt
Triallylamine		102-70-5	140	143	nt	nt
Tribromomethane		75-25-2	260	261	nt	nt
Tribromophenol		118-79-6	310	316	T	nt
Tributylamine		102-82-9	140	143	nt	nt
Tributyltin oxide		56-35-9	470	470	nt	nt
Trichloroacetaldehyde		75-87-6	120	121	nt	nt
Trichloroacetic acid		76-03-9	100	103	T	nt
1,1,1-Trichloroacetone	Trichloroacetic acid	76-03-9	100	103	T	nt
1,1,3-Trichloroacetone		921-03-9	260 / 390	261 / 391	T	nt
Trichloroacetonitrile		545-06-2	430	431	nt	nt
1,2,4-Trichlorobenzene		120-82-1	260	263	T	nt
1,1,1-Trichloroethane		71-55-6	260	261	T	nt
1,1,2-Trichloroethane		79-00-5	260	261	T	nt
2,2,2-Trichloroethanol		115-20-8	310	315	T	nt
Trichloroethylene		79-01-6	260	264	T	T
Trichlorofluoromethane		75-69-4	260	261	nt	nt
Trichloroisocyanuric acid		87-90-1	270	274	nt	nt
Trichloromethane	Chloroform	67-66-3	260	261	T	T
Trichloromethanethiol		75-70-7	500	501	nt	nt
Trichloromethyl benzene	Benzotrichloride	98-07-7	260	263	T	nt
Trichloromethyl silane	Methyl trichlorosilane	75-79-6	480	480	T	nt

Chemical Name	Name in Data Table (if Synonym)	CAS Number	Class	Sub-Class	Limited Use	Re-usable
Tetramethylethylene oxide		5076-20-0	270	275	T	nt
Tetramethyl Oxirane	Tetramethylethylene oxide	5076-20-0	270	275	T	nt
N,N,N,N'-Tetramethyl-ethylenediamine		110-18-9	140	148	nt	nt
Tetramethyltin in n-pentane		Mixture	590	590	T	nt
1,1'-Thiobis (2-chloroethane)	Sulfur mustard	505-60-2	500 / 595	502 / 595	T	nt
Thioglycolic acid		68-11-1	100 / 500	103 / 501	T	nt
Thionyl chloride		7719-09-7	360	360	T	nt
Thiophenol	Phenyl mercaptan	108-98-5	500	501	T	nt
Thiopropane	Dimethyl sulfide	75-18-3	500	502	T	nt
Thioxamyl	Oxamyl	23135-22-0	130	137	T	nt
Titanium chloride	Titanium tetrachloride	7550-45-0	360	360	T	nt
Titanium dioxide		13463-67-7	380	380	nt	T
Titanium tetrachloride		7550-45-0	360	360	T	nt
TNT		118-96-7	440	442	nt	T
Toluene		108-88-3	290	292	T	nt
Toluene 80%, Dichlorotriazine 20%		mixture	260	263	T	nt
Toluene-1,3-diisocyanate		26471-62-5	210	212	T	nt
Tricresyl phosphate	Tritolyl phosphate	1330-78-5	460	462	T	nt
Triethanolamine		102-71-6	140	143	nt	nt
Triethoxysilane		998-30-1	480	480	T	nt
Triethyl aluminum		97-93-8	470	470	T	nt
Triethylamine		121-44-8	140	143	T	nt
Triethylenetetramine		112-24-3	140	149	nt	nt
Trifluoroacetic acid		76-05-1	100	103	T	nt
Trifluoroacetyl chloride		354-32-5	110	111	T	nt
2,2,2-Trifluoroethanol		75-89-8	310	315	T	nt
Trifluoromethane		75-46-7	260	261	T	nt
Trifluoromethane sulfonic acid		1493-13-6	500	504	T	nt
Trimethylamine gas		75-50-3	140	143	T	nt
1,2,4-Trimethylbenzene		95-63-6	290	292	nt	nt
1,2,3-Trimethylbenzene		526-73-8	290	292	T	nt
Trimethylcyclohexane		98-55-5	290	291	nt	nt
3,5,5-Trimethyl cyclohexanol		116-02-9	310	312	nt	nt

Copyright © 2004 E. I. du Pont de Nemours and Company. All rights reserved.

Chemical Name	Name in Data Table (if Synonym)	CAS Number	Class	Sub-Class	Limited Use	Re-usable
Trichlorophenylsilane		98-13-5	480	480	T	nt
1,2,3-Trichloropropane		96-18-4	260	261	nt	nt
1,1,3-Trichloro-2-propanone	1,1,3-Trichloroacetone	921-03-9	260	261	T	nt
Trichlorosilane		10025-78-2	480	480	T	nt
1,1,2-Trichloro-1,2,2-trifluoroethane		76-13-1	260	261	T	nt
Trichlorovinylsilane		75-94-5	480	480	T	nt
Triclene	Trichloroethylene	79-01-6	260	264	T	T
N-Vinylpyrrolidone		88-12-0	130	132	nt	nt
Vinyl trichlorosilane	Trichlorovinylsilane	75-94-5	480	480	T	nt
VM and P naphtha		8032-32-4	290	291	T	nt
VX Nerve Agent		50782-69-9	460 / 595	462 / 595	T	nt
Vydate	Oxamyl	23135-22-0	130	137	T	nt
Water		7732-18-5	590	590	nt	nt
White liquor		68131-33-9	590	590	T	T
Wood alcohol	Methanol	67-56-1	310	311	T	T

Chemical Name	Name in Data Table (if Synonym)	CAS Number	Class	Sub-Class	Limited Use	Re-usable
2,2,4-Trimethylpentane		540-84-1	140	142	nt	nt
Trimethyl phosphate		512-56-1	460	462	T	nt
Trimethyl phosphite		121-45-9	460	462	T	nt
2,4,6-Trinitrophenol		88-89-1	310 / 440	316 / 440	nt	nt
2,4,6-Trinitrotoluene		118-96-7	440	442	nt	nt
Trioctyl phosphate		25103-12-2	460	462	nt	nt
Triphenyl phosphite		101-02-0	460	462	T	nt
Tripropylamine		102-69-2	140	146	T	nt
Tritolyl phosphate		1330-78-5	460	462	T	nt
Tungsten hexafluoride		7783-82-6	350	350	T	nt
Turpentine		8006-64-2	290	294	T	nt
Vinyl acetate		108-05-4	220	222	T	nt
Vinylbenzene	Styrene	100-42-5	290	292	T	nt
Vinyl bromide		593-60-2	260	264	T	nt
Vinyl chloride		75-01-4	260	264	T	nt
4-Vinyl-1-cyclohexene		100-40-3	290	294	nt	nt
Vinyl fluoride		75-02-5	260	264	nt	nt
Vinylidene chloride		75-35-4	260	264	T	nt
Vinylmagnesium chloride		3536-96-7	470	470	T	nt
4-Vinyl pyridine		100-43-6	270	271	T	nt
Wood ether	Dimethyl ether	115-10-6	240	241	T	nt
o-Xylene		95-47-6	290	292	T	nt
Xylene, mixed isomers		1330-20-7	290	292	T	nt
Xylenol		1300-71-6	310	316	nt	nt
Xylidine		1300-73-8	140	145	nt	nt
Yperite	Sulfur mustard	505-60-2	500 / 595	502 / 595	T	nt
Zinc chromate		13530-65-9	340	340	nt	nt
Zinc cyanide		557-21-1	345	345	nt	

Copyright © 2004 E. I. du Pont de Nemours and Company. All rights reserved.

Chemical Index by Chemical Abstract System (CAS) Number

The Permeation Data Table shows test results for certain tested **(T)** chemicals in associated subclasses as defined in ASTM F1186. For chemicals not tested **(nt)**, the chemical subclass number is provided so users may view test results for tested chemicals in that subclass. Prediction of chemical resistance of a material from data on other chemicals has not been successful. However, when data is unavailable, information on related chemicals within a sub-class may at least rank alternative chemical protective materials as to their probable chemical resistance.

CAS Number	Index Name	Class	Sub-Class	Limited Use	Re-usable
50-00-0	Formaldehyde	120	121	T	nt
50-21-5	Lactic acid	100	103	nt	nt
50-32-8	Benzo[a]pyrene	290	292 / 293	T	nt
51-79-6	Ethyl carbamate	230	233	nt	nt
54-11-5	Nicotine	270	271	T	nt
55-63-0	Nitroglycerine	440	442	nt	nt
56-23-5	Carbon tetrachloride	260	261	T	nt
56-35-9	Bis(tributyltin)oxide	470	470	nt	nt
56-38-2	Ethyl parathion	460	462	T	nt
56-55-3	1,2-Benzanthracene	290	293	nt	nt
56-81-5	Glycerine	310	314	T	nt
57-10-3	Palmitic acid	100	102	nt	nt
57-11-4	Stearic acid	100	102	nt	nt
57-14-7	1,1-Dimethylhydrazine	280	280	T	nt
57-55-6	Propylene glycol	310	314	T	nt
57-74-9	Chlordane	260	261	T	nt
58-89-9	Lindane	260	261	T	nt
59-50-7	4-Chloro-m-cresol	260 / 310	263 / 316	nt	nt
60-12-8	Benzeneethanol	310	318	T	nt
60-12-8	1-Hydroxy-2-Phenylethane	310	318	T	nt
60-12-8	Phenethyl Alcohol	310	318	T	nt
60-12-8	2-Phenethyl Alcohol	310	318	T	nt
60-12-8	2-Phenethanol	310	318	T	nt
60-12-8	2-Phenylethanol	310	318	T	nt
60-12-8	Beta-Phenylethyl Alcohol	310	318	T	nt
60-12-8	Phenylethyl Alcohol	310	318	T	nt
60-29-7	Ethyl ether	240	241	T	nt
60-33-3	Linoleic acid	100	102	nt	nt
60-34-4	Methylhydrazine	280	280	T	nt
60-35-5	Acetamide	130	132	nt	nt
62-50-0	Ethyl methanesulfonate	500	507	nt	nt
62-53-3	Aniline	140	145	T	nt
62-75-9	Dimethyl nitrosamine	450	450	T	nt
67-63-0	Isopropanol	310	312	T	nt
67-64-1	Acetone	390	391	T	T
67-66-3	Chloroform	260	261	T	T
67-68-5	Dimethyl sulfoxide	500	503	T	nt
67-72-1	Carbon hexachloride	260	261	nt	nt
68-11-1	Thioglycolic acid	100 / 500	103 / 501	T	nt
68-12-2	N,N-Dimethylformamide	130	132	T	T
71-23-8	n-Propanol	310	311	T	nt
71-36-3	n-Butanol	310	311	T	nt
71-41-0	n-Pentanol	310	311	nt	nt
71-43-2	Benzene	290	292	T	nt
71-55-6	1,1,1-Trichloroethane	260	261	T	nt
74-82-8	Methane	290	291	T	nt
74-83-9	Methyl bromide	260	261	T	nt
74-85-1	Ethylene	290	294	T	nt
74-87-3	Methyl chloride	260	261	T	T
74-88-4	Methyl iodide	260	261	T	T
74-89-5	Methylamine	140	141	T	nt
74-90-8	Hydrogen cyanide gas	345 / 350	345 / 350	T	T
74-90-8	Hydrogen cyanide liquid	345 / 370	345 / 370	T	T
74-93-1	Methyl mercaptan	500	501	T	nt
74-95-3	Methylene bromide	260	261	T	nt
74-97-5	Bromochloromethane	260	261	T	nt
74-98-6	Propane	290	291	T	nt
75-00-3	Ethyl chloride	260	261	T	nt
75-01-4	Vinyl chloride	260	264	T	nt
75-02-5	Vinyl fluoride	260	264	nt	nt
75-03-6	Ethyl iodide	260	261	nt	nt
75-04-7	Ethylamine	140	141	T	nt
75-05-8	Acetonitrile	430	431	T	T
75-07-0	Acetaldehyde	120	121	T	nt
75-08-1	Ethyl mercaptan	500	501	nt	nt
76-06-2	Chloropicrin	260	261	T	nt

Copyright © 2004 E. I. du Pont de Nemours and Company. All rights reserved.

Chemical Index by Chemical Abstract System (CAS) Number

CAS Number	Index Name	Class	Sub-Class	Limited Use	Re-usable
64-17-5	Ethanol	310	311	T	nt
64-18-6	Formic acid	100	102	T	T
64-19-7	Acetic acid	100	102	T	T
64-67-5	Diethyl sulfate	500	507	T	nt
66-25-1	1-Hexanal	120	121	nt	nt
67-56-1	Methanol	310	311	T	T
75-09-2	Dichloromethane	260	261	T	T
75-12-7	Formamide	130	132	nt	nt
75-15-0	Carbon disulfide	500	502	T	T
75-18-3	Dimethyl sulfide	500	502	T	nt
75-21-8	Ethylene oxide	270	275	T	T
75-25-2	Tribromomethane	260	261	nt	nt
75-28-5	Isobutane	290	291	T	nt
75-29-6	Isopropyl chloride	260	261	nt	nt
75-31-0	Isopropylamine	140	141	T	nt
75-34-3	1,1-Dichloroethane	260	261	nt	nt
75-35-4	Vinylidene chloride	260	264	T	nt
75-36-5	Acetyl chloride	110	111	T	nt
75-44-5	Phosgene	350	350	T	T
75-46-7	Trifluoromethane	260	261	T	nt
75-50-3	Trimethylamine gas	140	143	T	nt
75-52-5	Nitromethane	440	441	T	nt
75-55-8	Propyleneimine	270	274	nt	nt
75-56-9	1,2-Propylene oxide	270	275	T	nt
75-64-9	tert-Butylamine	140	141	T	nt
75-65-0	tert-Butyl alcohol	310	313	T	nt
75-66-1	t-Butyl mercaptan	500	501	nt	nt
75-66-1	2-Methyl-2-propanethiol	500	501	nt	nt
75-69-4	Trichlorofluoromethane	260	261	nt	nt
75-70-7	Trichloromethanethiol	500	501	nt	nt
75-73-0	Tetrafluoromethane	260	261	T	nt
75-75-2	Methanesulfonic acid	500	504	T	nt
75-78-5	Dimethyldichlorosilane	480	480	T	nt
75-79-6	Methyl trichlorosilane	480	480	T	nt
75-86-5	Acetone cyanohydrin	310 / 430	313 / 431	T	T
75-87-6	Trichloroacetaldehyde	120	121	nt	nt
75-89-8	2,2,2-Trifluoroethanol	310	315	T	nt
75-93-4	Methyl sulfate	500	507	nt	nt
75-94-5	Trichlorovinylsilane	480	480	T	nt
76-01-7	Pentachloroethane	260	261	nt	nt
76-03-9	Trichloroacetic acid	100	103	T	nt
76-13-1	1,1,2-Trichloro-1,2,2-trifluoroethane	260	261	T	nt
76-16-4	Hexafluoroethane	260	261	T	nt
77-47-4	Hexachloro cyclopentadiene	260	264	T	nt
77-78-1	Dimethyl sulfate	500	507	T	T
77-81-6	Tabun	460 / 595	462 / 595	T	nt
77-92-9	Citric acid	100	104	nt	nt
78-00-2	Tetraethyl lead	470	470	T	nt
78-10-4	Tetraethoxysilane	480	480	T	nt
78-59-1	Isophorone	390	391	nt	nt
78-78-4	Isopentane	290	291	nt	nt
78-79-5	Isoprene	290	296	T	nt
78-81-9	Isobutylamine	140	141	nt	nt
78-83-1	Isobutanol	310	311	T	nt
78-84-2	Isobutyraldehyde	120	121	nt	nt
78-87-5	Propylene dichloride	260	261	T	nt
78-88-6	2,3-Dichloropropene	260	261	T	nt
78-90-0	Propylene diamine	140	148	nt	nt
78-92-2	sec-Butyl alcohol	310	312	nt	nt
78-93-3	Methyl ethyl ketone	390	391	T	nt
78-95-5	Chloroacetone	390	391	T	nt
79-00-5	1,1,2-Trichloroethane	260	261	T	nt
79-01-6	Trichloroethylene	260	264	T	T
79-03-8	Propanoyl chloride	110	111	nt	nt
79-04-9	Chloroacetyl chloride	110	111	T	nt
79-06-1	Acrylamide	130	135	T	nt
79-09-4	Propionic acid	100	102	T	nt
79-10-7	Acrylic acid	100	102	T	T
79-11-8	Chloroacetic acid	100	103	T	nt
79-14-1	Glycolic acid	100	103	T	nt
79-20-9	Methyl acetate	220	222	nt	nt
79-21-0	Peroxyacetic acid	300	300	nt	nt
79-22-1	Methyl chloroformate	110	113	T	nt
79-24-3	Nitroethane	440	441	nt	nt
79-27-6	1,1,2,2-Tetrabromoethane	260	261	T	nt
79-34-5	1,1,2,2-Tetrachloroethane	260	261	T	nt
95-50-1	1,2-Dichlorobenzene	260	263	nt	nt
95-51-2	o-Chloroaniline	140	145	nt	nt
95-53-4	o-Toluidine	140	145	T	nt
95-57-8	o-Chlorophenol	260 / 310	263 / 316	nt	nt
95-63-6	1,2,4-Trimethylbenzene	290	292	nt	nt
95-76-1	3,4-Dichloroaniline	140 / 260	145 / 263	T	nt

Copyright © 2004 E. I. du Pont de Nemours and Company. All rights reserved.

Chemical Index by Chemical Abstract System (CAS) Number

CAS Number	Index Name	Class	Sub-Class	Limited Use	Re-usable
76-05-1	Trifluoroacetic acid	100	103	T	nt
79-36-7	Dichloroacetyl chloride	110	111	T	nt
79-39-0	Methacrylamide	130	135	nt	nt
79-41-4	Methacrylic acid	100	102	T	nt
79-43-6	Dichloroacetic acid	100	103	nt	nt
79-46-9	2-Nitropropane	440	441	T	nt
79-95-8	2,2', 6,6'-Tetrachlorobisphenol A	260 / 310	263 / 316	T	nt
80-05-7	4,4'-Isopropylidine diphenol	310	316	nt	nt
80-43-3	Cumene peroxide	300	300	nt	nt
80-62-6	Methyl methacrylate	220	223	T	nt
84-66-2	Diethyl phthalate	220	226	nt	nt
84-69-5	Diisobutyl phthalate	220	226	nt	nt
84-74-2	n-Butyl phthalate	220	226	nt	nt
85-01-8	Phenanthrene	290	293	nt	nt
85-68-7	Butyl benzyl phthalate	220	226	nt	nt
86-73-7	Fluorene	290	293	nt	nt
87-68-3	Hexachlorobutadiene	260	264	T	nt
87-86-5	Pentachlorophenol	310	316	T	nt
87-90-1	Trichloroisocyanuric acid	270	274	nt	nt
88-12-0	N-Vinylpyrrolidone	130	132	nt	nt
88-72-2	o-Nitrotoluene	440	442	T	nt
88-73-3	o-Nitrochlorobenzene	260 / 440	263 / 442	T	nt
88-75-5	2-Nitrophenol	310 / 440	316 / 442	T	nt
88-89-1	2,4,6-Trinitrophenol	310 / 440	316 / 440	nt	nt
89-72-5	o-sec-Butylphenol	310	316	nt	nt
90-00-6	Ethylphenol	310	316	nt	nt
91-17-8	Decahydronaphthalene	290	291	nt	nt
91-20-3	Naphthalene	290	293	T	nt
91-22-5	Quinoline	270	274	nt	nt
91-66-7	Diethylaniline crude	140	146	T	nt
91-67-8	Diethyl-m-toluidine crude	140	145	T	nt
91-94-1	3,3'-Dichlorobenzidine	140 / 260	149 / 263	nt	nt
92-87-5	Benzidine	140	145 / 149	T	nt
93-89-0	Ethyl benzoate	220	226	nt	nt
95-47-6	o-Xylene	290	292	T	nt
95-48-7	o-Cresol	310	316	T	nt
95-49-8	o-Chlorotoluene	260	263	T	nt
100-41-4	Ethyl benzene	290	290	T	nt
100-42-5	Styrene	290	292	T	nt
100-43-6	4-Vinyl pyridine	270	271	T	nt
100-44-7	Benzyl chloride	260	266	T	nt
100-47-0	Benzonitrile	430	432	T	nt

CAS Number	Index Name	Class	Sub-Class	Limited Use	Re-usable
96-12-8	1,2-Dibromo-3-chloropropane	260	261	T	nt
96-18-4	1,2,3-Trichloropropane	260	261	nt	nt
96-29-7	Methyl ethyl ketoxime	590	590	T	nt
96-33-3	Methyl acrylate	220	223	T	nt
96-34-4	Methyl chloroacetate	220	222	nt	nt
96-48-0	gamma-Butyrolactone	220	225	T	nt
96-64-0	Soman (GD) Chemical Agent	460 / 595	462 / 595	T	nt
97-63-2	Ethyl methacrylate	220	223	T	nt
97-93-8	Triethyl aluminum	470	470	T	nt
98-00-0	2-Furyl methanol	310	318	nt	nt
98-01-1	2-Furaldehyde	120 / 270	122 / 277	T	T
98-07-7	Benzotrichloride	260	263	T	nt
98-09-9	Benzene sulfonyl chloride	500	505	T	nt
98-13-5	Trichlorophenylsilane	480	480	T	nt
98-29-3	4-tert-Butyl catechol	310	316	T	nt
98-54-4	p-tert-Butylphenol	310	316	nt	nt
98-55-5	Trimethylcyclohexane	290	291	nt	nt
98-56-6	4-Chlorobenzotrifluoride	260	263	T	nt
98-82-8	Cumene	290	292	T	nt
98-85-1	Alphamethyl-Benzenemethanol	310	318	T	nt
98-85-1	1-Hydroxy-1-Phenylethane	310	318	T	nt
98-85-1	1-Phenethanol	310	318	T	nt
98-85-1	1-Phenethyl Alcohol	310	318	T	nt
98-85-1	a-Phenylethyl alcohol	310	318	T	nt
98-85-1	1-Phenylethanol	310	318	T	nt
98-86-2	Acetophenone	390	392	T	nt
98-88-4	Benzoyl chloride	110	112	T	nt
98-95-3	Nitrobenzene	440	441	T	T
99-08-1	m-Nitrotoluene	440	442	nt	nt
99-99-0	p-Nitrotoluene	440	442	T	nt
100-00-5	p-Nitrochlorobenzene	260 / 440	263 / 442	T	nt
100-07-2	Anisoyl chloride	110 / 240	112 / 243	nt	nt
100-37-8	N,N-Diethylethanolamine	140	143	nt	nt
100-39-0	Benzyl bromide	260	266	nt	nt
100-40-3	4-Vinyl-1-cyclohexene	290	294	nt	nt
106-95-6	Allyl bromide	260	265	nt	nt
106-97-8	n-Butane	290	291	nt	nt
106-98-9	Butene	290	294	nt	nt
106-99-0	1,3-Butadiene	290	296	T	nt
107-02-8	Acrolein	120	121	T	nt
107-05-1	Allyl chloride	260	265	T	nt
107-06-2	1,2-Dichloroethane	260	261	T	nt

Copyright © 2004 E. I. du Pont de Nemours and Company. All rights reserved.

Chemical Index by Chemical Abstract System (CAS) Number

CAS Number	Index Name	Class	Sub-Class	Limited Use	Re-usable
100-51-6	Benzyl alcohol	310	312	T	nt
100-52-7	Benzaldehyde	120	122	T	nt
100-61-8	N-Methylaniline	140	146	nt	nt
100-63-0	Phenyl hydrazine	280	280	nt	nt
100-97-0	Hexamethylenetriamine	270	274	nt	nt
101-02-0	Triphenyl phosphite	460	462	T	nt
101-14-4	4,4'-Methylene bis (o-chloroaniline)	140	149	T	nt
101-68-8	4,4'-Diphenyl methane diisocyanate	210	212	T	nt
101-77-9	4,4'-Methylene dianiline	140	145 / 149	T	nt
101-80-4	4,4'-Oxydianiline	140	149	nt	nt
102-69-2	Tripropylamine	140	146	T	nt
102-70-5	Triallylamine	140	143	nt	nt
102-71-6	Triethanolamine	140	143	nt	nt
102-82-9	Tributylamine	140	143	nt	nt
103-11-7	2-Ethylhexyl acrylate	220	223	nt	nt
103-71-9	Phenyl isocyanate	210	212	T	nt
104-49-4	Paraphenylene diisocyanate	210	212	T	nt
104-75-6	2-Ethylhexylamine	140	141	nt	nt
104-76-7	2-Ethylhexanol	310	311	nt	nt
104-90-5	Methyl ethyl pyridine	270	271	nt	nt
105-58-8	Diethyl carbonate	230	233	nt	nt
105-67-9	2,4-Dimethylphenol	310	316	nt	nt
106-20-7	2,2'-Diethyldihexylamine	140	142	nt	nt
106-47-8	p-Chloroaniline	140	145	T	nt
106-48-9	4-Chlorophenol	260 / 310	263 / 316	T	nt
106-63-8	Isobutyl acrylate	220	223	nt	nt
106-88-7	1,2-Butylene oxide	270	275	T	nt
106-89-8	Epichlorohydrin	260 / 270	261 / 275	T	T
106-92-3	Allyl glycidyl ether	270	275	nt	nt
106-93-4	Ethylene dibromide	260	261	T	nt
107-07-3	2-Chloroethanol	260 / 310	261 / 315	T	nt
107-10-8	n-Propylamine	140	141	T	nt
107-11-9	Allylamine	140	141	nt	nt
107-12-0	Ethyl cyanide	345	345	nt	nt
107-13-1	Acrylonitrile	430	431	T	T
107-14-2	Chloroacetonitrile	260 / 430	261 / 431	nt	nt
107-15-3	Ethylenediamine	140	148	T	nt
107-18-6	Allyl alcohol	310	311	T	T
107-20-0	2-Chloroacetaldehyde	120 / 260	121 / 261	nt	nt
107-21-1	Ethylene glycol	310	314	T	nt
107-30-2	Chloromethyl methyl ether	240	241	T	nt
107-31-3	Methyl formate	220	221	T	nt
107-44-8	Sarin	460 / 595	462 / 595	T	nt
107-88-0	1,3-Butylene glycol	310	314	nt	nt
107-92-6	n-Butyric acid	100	102	T	nt
107-98-2	1-Methoxy-2-propanol	240	245	nt	nt
108-01-0	2-Dimethyl aminoethanol	140	143	nt	nt
108-03-2	1-Nitropropane	440	441	nt	nt
108-05-4	Vinyl acetate	220	222	T	nt
108-09-8	1,3-Dimethyl butylamine	140	143	nt	nt
108-10-1	Methyl isobutyl ketone	390	391	T	nt
108-11-2	Methyl isobutyl carbinol	310	312	nt	nt
108-18-9	Diisopropylamine	140	142	nt	nt
108-20-3	Isopropyl ether	240	241	nt	nt
108-21-4	Isopropyl acetate	220	222	nt	nt
108-24-7	Acetic anhydride	160	161	T	nt
108-31-6	Maleic anhydride	160	161	T	nt
108-39-4	m-Cresol	310	316	nt	nt
108-43-0	3-Chlorophenol	260 / 310	263 / 316	nt	nt
110-57-6	trans-1,4-Dichloro-2-butene	260	264	T	nt

Copyright © 2004 E. I. du Pont de Nemours and Company. All rights reserved.

Chemical Index by Chemical Abstract System (CAS) Number

CAS Number	Index Name	Class	Sub-Class	Limited Use	Re-usable
106-94-5	1-Bromo propane	310	315	nt	nt
108-44-1	m-Toluidine	140	145	T	nt
108-45-2	m-Phenylenediamine	140	149	nt	nt
108-46-3	1,3-Benzenediol	310	316	nt	nt
108-60-1	Dichloroisopropyl ether	240 / 260	241 / 261	nt	nt
108-77-0	Cyanuric chloride	260 / 270	263 / 274	T	nt
108-83-8	Diisobutyl ketone	390	391	nt	nt
108-86-1	Phenyl bromide	260	263	nt	nt
108-88-3	Toluene	290	292	T	T
108-90-7	Chlorobenzene	260	263	T	nt
108-91-8	Cyclohexylamine	140	141	T	nt
108-93-0	Cyclohexanol	310	312	nt	nt
108-94-1	Cyclohexanone	390	391	T	nt
108-95-2	Phenol	310	316	T	T
108-98-5	Phenyl mercaptan	500	501	T	nt
108-99-6	3-Picoline	270	271	T	nt
109-06-8	2-Picoline	270	271	T	nt
109-55-7	3-Dimethyl aminopropylamine	140	148	nt	nt
109-60-4	Propyl acetate	220	222	nt	nt
109-63-7	Boron trifluoride etherate	590	590	T	nt
109-69-3	n-Butyl chloride	260	261	nt	nt
109-73-9	n-Butylamine	140	141	T	nt
109-79-5	n-Butyl mercaptan	500	501	nt	nt
109-83-1	N-Methylethanolamine	140	142	nt	nt
109-86-4	Methyl Cellosolve®	240	245	T	nt
109-89-7	Diethylamine	140	142	T	T
109-92-2	Ethyl vinyl ether	240 / 260	246 / 261	T	nt
109-97-7	Pyrrole	270	274	nt	nt
109-99-9	Tetrahydrofuran	240	241	T	T
110-00-9	Furan	270	277	nt	nt
110-16-7	Maleic acid	100	104	T	nt
110-63-4	1,4-Butanediol	310	314	T	nt
110-75-8	2-Chloroethyl vinyl ether	240 / 260	241 / 261	nt	nt
110-80-5	Ethyl Cellosolve®	240	245	T	nt
110-82-7	Cyclohexane	290	291	T	nt
110-85-0	1,4-Diethylenediamine	270	274	nt	nt
110-86-1	Pyridine	270	271	T	nt
110-89-4	Piperidine	270	274	nt	nt
110-91-8	Morpholine	140	142	T	nt
111-15-9	Ethyl Cellosolve® acetate	240	245	T	nt
111-27-3	Hexyl alcohol	310	311	nt	nt
111-30-8	Glutaraldehyde	120	121	T	nt
111-40-0	Diethylenetriamine	140	148	T	nt
111-42-2	Diethanolamine	140	142	T	nt
111-44-4	Dichloroethyl ether	240 / 260	241 / 261	T	nt
111-46-6	Diethylene glycol	310	314	nt	nt
111-55-7	Ethylene glycol diacetate	220	222	nt	nt
111-65-9	n-Octane	290	291	T	nt
111-69-3	Adiponitrile	430	431	T	nt
111-76-2	Butyl Cellosolve®	240	245	T	nt
111-77-3	Diethylene glycol monomethyl ether	240	245	nt	nt
111-86-4	n-Octylamine	140	141	nt	nt
111-87-5	n-Octanol	310	311	nt	nt
111-90-0	Ethylene diglycol monoethyl ether	240	245	T	nt
111-92-2	Di-n-butylamine	140	142	nt	nt
112-07-2	Butyl Cellosolve® acetate	240	245	nt	nt
112-20-9	Nonylamine	140	141	T	nt
112-24-3	Triethylenetetramine	140	149	nt	nt
112-31-2	n-Decyl aldehyde	120	121	nt	nt
112-34-5	n-Butyl Carbitol®	240	245	nt	nt
112-35-6	Methyltriglycol	240	245	nt	nt
112-52-7	Chlorododecane	260	261	nt	nt

Copyright © 2004 E. I. du Pont de Nemours and Company. All rights reserved.

Chemical Index by Chemical Abstract System (CAS) Number

CAS Number	Index Name	Class	Sub-Class	Limited Use	Re-usable
110-18-9	N,N,N,N'-Tetramethyl ethylenediamine	140	148	nt	nt
110-49-6	Methyl Cellosolve® acetate	240	245	T	nt
110-51-0	Borane pyridine complex	590	590	T	T
110-52-1	1,4-Dibromobutane	260	261	nt	nt
110-54-3	n-Hexane	290	291	T	T
115-20-8	2,2,2-Trichloroethanol	310	315	T	nt
116-02-9	3,5,5-Trimethyl cyclohexanol	310	312	nt	nt
116-14-3	Tetrafluoroethylene	260	264	nt	nt
117-81-7	Di (2-ethylhexyl) phthalate	220	226	T	nt
117-84-0	Di-n-octyl phthalate	220	226	nt	nt
118-74-1	Hexachlorobenzene	260	263	nt	nt
118-79-6	Tribromophenol	310	316	T	nt
118-96-7	2,4,6-Trinitrotoluene	440	442	nt	nt
119-36-8	Methyl salicylate	220	226	T	nt
120-12-7	Anthracene	290	293	T	nt
120-51-4	Benzyl benzoate	220	226	nt	nt
120-61-6	Dimethyl terephthalate	220	226	nt	nt
120-82-1	1,2,4-Trichlorobenzene	260	263	T	nt
120-83-2	2,4-Dichlorophenol	260 / 310	263 / 316	nt	nt
121-44-8	Triethylamine	140	143	T	nt
121-45-9	Trimethyl phosphite	460	462	T	nt
121-69-7	N,N-Dimethylaniline	140	146	T	nt
121-75-5	Malathion	460	462	T	nt
122-39-4	Diphenylamine	140	146	nt	nt
122-60-1	Phenyl glycidyl ether	270	275	T	nt
122-66-7	Hydrazobenzene	280	280	nt	nt
123-05-7	Ethyl hexaldehyde	120	121	nt	nt
123-31-9	Hydroquinone	310	316	nt	nt
123-38-6	Propionaldehyde	120	121	T	nt
123-39-7	N-methylformamide	130	132	T	nt
123-51-3	Isoamyl alcohol	310	312	T	nt
123-62-6	Propionic anhydride	160	161	nt	nt
123-63-7	Paraldehyde	120	121	nt	nt
123-72-8	n-Butyraldehyde	120	121	T	nt
123-73-9	trans-Crotonaldehyde	120	121	nt	nt
123-75-1	Pyrrolidine	270	274	T	nt
123-86-4	n-Butyl acetate	220	222	T	nt
112-57-2	Tetraethylene pentamine	140	148	nt	nt
112-80-1	Oleic acid	100	102	nt	nt
115-10-6	Dimethyl ether	240	241	T	nt
124-18-5	Decane	290	291	nt	nt
124-40-3	Dimethylamine	140	142	T	nt
124-41-4	Sodium methylate	550	550	T	nt
124-63-0	Chloro Methyl Sulfone	500	505	T	nt
124-63-0	Mesyl Chloride	500	505	T	nt
124-63-0	Methanesulfonyl Chloride	500	505	T	nt
124-63-0	Methyl Sulfochloride	500	505	T	nt
124-63-0	Methylsulfonyl Chloride	500	505	T	nt
126-98-7	Methacrylonitrile	430	431	nt	nt
126-99-8	2-Chloro-1,3-butadiene	260	264	T	nt
127-00-4	1-Chloro-2-propanol	260 / 310	261 / 315	nt	nt
127-08-2	Potassium acetate	340	340	T	nt
127-18-4	1,1,2,2-Tetrachloroethylene	260	264	T	T
127-19-5	N,N-Dimethylacetamide	130	132	T	nt
129-00-0	Benzophenanthrene	290	293	nt	nt
131-11-3	Dimethyl phthalate	220	226	nt	nt
134-32-7	Naphthylamine	140	145	nt	nt
136-60-7	n-Butyl benzoate	220	226	nt	nt
137-06-4	2-Tolyl mercaptan	500	501	nt	nt
138-86-3	Dipentene	290	296	nt	nt
140-29-4	Benzyl Cyanide	430	432	T	nt
140-11-4	Benzyl acetate	220	222	nt	nt
140-88-5	Ethyl acrylate	220	223	T	nt
141-32-2	n-Butyl acrylate	220	223	T	nt
141-43-5	Ethanolamine	140 / 310	141 / 311	T	nt
141-78-6	Ethyl acetate	220	222	T	T
141-79-7	Mesityl oxide	390	391	T	nt
141-91-3	Dimethylmorpholine	140	142	nt	nt
141-97-9	Ethyl acetoacetate	220	222	nt	nt
142-82-5	n-Heptane	290	291	T	nt
142-84-7	n-Dipropylamine	140	142	nt	nt
142-96-1	n-Butyl ether	240	241	T	nt
143-07-7	Lauric acid	100	102	nt	nt
143-33-9	Sodium cyanide	345	345	T	nt

Copyright © 2004 E. I. du Pont de Nemours and Company. All rights reserved.

Chemical Index by Chemical Abstract System (CAS) Number

CAS Number	Index Name	Class	Sub-Class	Limited Use	Re-usable
123-91-1	1,4-Dioxane	270	278	T	nt
124-02-7	Diallylamine	140	142	nt	nt
124-04-9	Adipic acid	100	104	nt	nt
124-07-2	Octanoic acid	100	102	T	nt
124-09-4	Hexamethylene diamine	140	148	T	nt
260-94-6	Acridine	290	293	nt	nt
287-92-3	Cyclopentane	290	291	nt	nt
298-00-0	Methyl parathion	460	462	T	nt
302-01-2	Hydrazine	280	280	T	nt
333-41-5	Diazinon	460	462	T	nt
353-42-4	Boron trifluoride dimethyletherate	590	590	T	nt
354-32-5	Trifluoroacetyl chloride	110	111	T	nt
372-09-8	Cyanoacetic acid	100	103	nt	nt
374-07-2	1,1-Dichloro tetrafluoroethane	260	261	T	nt
382-10-5	Hexafluoroisobutylene	260	261	T	nt
420-04-2	Cyanamide	345	345	nt	nt
459-72-3	Ethyl fluoroacetate	220	222	nt	nt
460-00-4	4-Bromofluorobenzene	260	263	T	nt
460-19-5	Cyanogen	345	345	nt	nt
462-06-6	Fluorobenzene	260	263	T	nt
462-94-2	1,5-Pentanediamine	140	148	nt	nt
497-19-8	Sodium carbonate	340	340	nt	nt
501-53-1	Benzyl chloroformate	110	113	T	nt
504-29-0	2-Aminopyridine	270	271	T	nt
504-60-9	1,3-Pentadiene	290	296	nt	nt
505-60-2	Sulfur mustard (HD) chemical agent	500 / 595	502 / 595	T	nt
506-68-3	Cyanogen bromide	345 / 350	345 / 350	nt	T
506-77-4	Chlorine cyanide	345	345	nt	nt
506-96-7	Acetyl bromide	110	111	T	nt
512-56-1	Trimethyl phosphate	460	462	T	nt
513-37-1	Dimethylvinyl chloride	260	264	nt	nt
526-73-8	1,2,3-Trimethylbenzene	290	292	T	nt

CAS Number	Index Name	Class	Sub-Class	Limited Use	Re-usable
144-55-8	Sodium bicarbonate	340	340	nt	nt
144-62-7	Oxalic acid	100	104	T	nt
149-57-5	2-Ethylhexanoic acid	100	102	nt	nt
151-50-8	Potassium cyanide	345	345	T	nt
151-56-4	Ethyleneimine	270	274	T	nt
151-67-7	Halothane	260	261	nt	nt
156-60-5	trans-1,2-dichloroethylene	260	261	T	nt
218-01-9	1,2-Benzophenanthrene	290	293	nt	nt
541-25-3	Lewisite (L) Chemical Agent	470 / 595	470 / 595	T	nt
542-56-3	Isobutyl nitrite	430	431	nt	nt
542-59-6	Ethylene glycol monoacetate	220	222	nt	nt
542-62-1	Barium cyanide	345	345	nt	nt
542-75-6	1,3-Dichloropropene	260	261	T	nt
542-76-7	3-Chloropropronitrile	260 / 430	261 / 431	nt	nt
542-88-1	Bis(chloromethyl) ether	240 / 260	241 / 261	nt	nt
544-92-3	Cuprous cyanide	345	345	nt	nt
545-06-2	Trichloroacetonitrile	430	431	nt	nt
557-19-7	Nickel cyanide	345	345	nt	nt
557-21-1	Zinc cyanide	345	345	nt	nt
558-13-4	Carbon tetrabromide	260	261	nt	nt
563-47-3	3-Chloro-2-methylpropene	260	265	nt	nt
583-52-8	Potassium oxalate	340	340	nt	nt
584-08-7	Potassium carbonate	340	340	T	nt
584-84-9	Toluene-2,4-diisocyanate	210	212	T	nt
590-17-0	Bromoacetonitrile	430	431	nt	nt
590-86-3	Isovaleraldehyde	120	121	nt	nt
591-78-6	Methyl n-butyl ketone	390	391	nt	nt
592-01-8	Calcium cyanide	345	345	nt	nt
592-04-1	Mercuric cyanide	345	345	nt	nt
592-27-8	Isooctane	290	291	nt	nt
592-41-6	1-Hexene	290	294	T	nt
593-53-3	Methyl fluoride	260	261	T	nt

Copyright © 2004 E. I. du Pont de Nemours and Company. All rights reserved.

Chemical Index by Chemical Abstract System (CAS) Number

CAS Number	Index Name	Class	Sub-Class	Limited Use	Re-usable
529-34-0	Tetralone	290	292	T	nt
532-27-4	Chloroacetophenone	260 / 390	261 / 392	T	nt
534-07-6	1,3-Dichloroacetone	260 / 390	261 / 391	T	nt
534-52-1	Dinitro-o-cresol	310 / 440	316 / 442	T	nt
538-93-2	Isobutylbenzene	290	292	T	nt
540-51-2	2-Bromoethanol	260 / 310	261 / 315	nt	nt
540-54-5	1-Chloropropane	260	261	nt	nt
540-59-0	1,2-Dichloroethylene	260	264	nt	T
540-84-1	2,2,4-Trimethylpentane	140	142	nt	nt
631-61-8	Ammonium acetate	340	340	nt	nt
640-19-7	Fluoroacetamide	130	132	nt	nt
646-06-0	1,3-Dioxolane	240	241	nt	nt
692-42-2	Diethyl arsine	470	470	nt	nt
755-95-3	1,4-Diiodo-1,1,2,2-tetrafluorobutane	260	261	T	nt
764-41-0	1,4-Dichloro-2-butene	260	264	T	nt
765-34-4	Glycidaldehyde	270	275	nt	nt
777-77-7	Methylacrylic acid	300	300	nt	nt
811-97-2	1,1,1,2-Tetrafluoroethane	260	261	T	nt
818-61-1	Hydroxyethyl acrylate	220	223	T	nt
822-06-0	Hexamethylene diisocyanate	210	211	T	nt
828-00-2	Dimethoxane	270	278	nt	nt
872-50-4	n-Methyl-2-pyrrolidone	130	132	T	nt
920-37-6	Chloroacrylonitrile	260 / 430	264 / 431	T	nt
921-03-9	1,1,3-Trichloroacetone	260 / 390	261 / 391	T	nt
998-30-1	Triethoxysilane	480	480	T	nt
999-97-3	Hexamethyldisilizane	140 / 480	142 / 480	T	nt
1066-30-4	Chromic acetate	550	550	nt	nt
1300-71-6	Xylenol	310	316	nt	nt
1300-73-8	Xylidine	140	145	nt	nt
1303-28-2	Arsenic pentoxide	365	365	nt	nt
1305-62-0	Calcium hydroxide	380	380	nt	nt
1305-78-8	Calcium oxide	380	380	nt	nt
1310-58-3	Potassium hydroxide	380	380	T	nt
1310-65-2	Lithium hydroxide	380	380	T	nt
1310-73-2	Sodium hydroxide	380	380	T	T
1313-82-2	Sodium sulfide	340	340	nt	nt
1314-56-3	Phosphoric anhydride	370	370	nt	nt
1317-65-3	Calcium carbonate	340	340	nt	nt
1319-77-3	Cresol, mixed isomers	310	316	T	nt
1321-12-6	Nitrotoluene, mixture	440	442	nt	nt
1321-74-0	Divinyl benzene	290	292	nt	nt

CAS Number	Index Name	Class	Sub-Class	Limited Use	Re-usable
593-60-2	Vinyl bromide	260	264	T	nt
611-14-3	2-Ethyltoluene	290	292	nt	nt
617-79-8	2-Ethylbutylamine	140	141	nt	nt
624-48-6	Dimethyl maleate	220	224	T	nt
624-83-9	Methyl isocyanate	210	211	T	nt
624-92-0	Dimethyl disulfide	500	502	T	nt
627-18-9	3-Bromo-1-propanol	260 / 310	261 / 315	nt	nt
627-30-5	3-Chloro-1-propanol	260 / 310	261 / 315	nt	nt
628-63-7	n-Amyl acetate	220	222	T	nt
630-08-0	Carbon monoxide	350	350	T	nt
630-20-6	1,1,1,2-Tetrachloroethane	260	261	nt	nt
1338-23-4	2-Butanone peroxide	300	300	nt	nt
1401-55-4	Tannic acid	310	316	nt	nt
1493-13-6	Trifluoromethane sulfonic acid	500	504	T	nt
1552-12-1	Cyclooctadiene	290	296	T	nt
1615-80-1	Diethylhydrazine	280	280	nt	nt
1633-83-6	1,4-Butanesultone	500	503	nt	nt
1634-04-4	Methyl t-butyl ether	240	241	T	nt
1675-54-3	Bisphenol-A diglycidyl ether	270	275	T	nt
1746-01-6	Dioxin	260	263	nt	nt
1888-71-7	Hexachloropropene	260	264	nt	nt
2050-92-2	Di-n-amylamine	140	142	nt	nt
2163-42-0	2-Methyl-1,3-propanediol	310	314	T	nt
2210-28-8	Propyl methacrylate	220	223	nt	nt
2425-79-8	1,4-Butanediol diglycidyl ether	270	275	nt	nt
2551-62-4	Sulfur hexafluoride	350 / 500	350 / 509	T	nt
2642-71-9	Azinphos ethyl	460	462	nt	nt
2696-92-6	Nitrosyl chloride	350	350	nt	nt
2807-30-9	Ethylene glycol monopropyl ether	240	245	nt	nt
2921-88-2	Chlorpyrifos	460	462	T	nt
3071-32-7	Ethyl benzene hydroperoxide	300	300	T	nt
3132-64-7	Epibromohydrin	270	275	nt	nt
3173-53-3	Cyclohexyl isocyanate	210	211	T	nt
3536-96-7	Vinylmagnesium chloride, 16.5%	470	470	T	nt
3607-78-1	1,1,1-3,3,3-Hexachloropropane	260	264	T	nt
3811-04-9	Potassium chloride	340	340	nt	nt
3887-02-3	N-Methyl methacrylamide	130	135	T	nt
4098-71-9	Isophorone diisocyanate	210	211	T	nt
4109-96-0	Dichlorosilane	480	480	T	nt
4553-62-2	2-Methylglutaronitrile	430	431	T	nt
4635-87-4	3-Pentenenitrile	430	431	T	nt

Copyright © 2004 E. I. du Pont de Nemours and Company. All rights reserved.

Chemical Index by Chemical Abstract System (CAS) Number

CAS Number	Index Name	Class	Sub-Class	Limited Use	Re-usable
1327-53-3	Arsenic trioxide	365	365	nt	nt
1330-20-7	Xylene, mixed isomers	290	292	T	nt
1330-78-5	Tritolyl phosphate	460	462	T	nt
1333-82-0	Chromic acid	370	370	T	T
1336-21-6	Ammonium hydroxide	380	380	T	nt
6192-52-5	p-Toluene sulfonic acid monohydrate	500	504	T	nt
6291-84-5	Methyl aminopropylamine	140	148	nt	nt
6303-21-5	Hypophosphorus acid	370	370	T	nt
6915-15-7	Malic acid	100	104	nt	nt
7439-97-6	Mercury	330	330	T	nt
7446-09-5	Sulfur dioxide	350 / 365	350 / 365	T	nt
7446-11-9	Sulfur trioxide	365	365	T	T
7446-14-2	Lead sulfate	340	340	nt	nt
7446-70-0	Aluminum chloride	360	360	T	nt
7447-41-8	Lithium chloride	340	340	T	nt
7487-88-9	Magnesium sulfate	340	340	nt	nt
7487-94-7	Mercuric chloride	340	340	T	nt
7550-45-0	Titanium tetrachloride	360	360	T	T
7553-56-2	Iodine	330	330	T	T
7601-54-9	Sodium phosphate	340	340	nt	nt
7601-90-3	Perchloric acid	370	370	T	nt
7631-90-5	Sodium bisulfite	340	340	nt	nt
7637-07-2	Boron trifluoride	350 / 360	350 / 360	T	nt
7647-01-0	Hydrochloric acid	370	370	T	T
7647-01-0	Hydrogen chloride gas	350	350	T	T
7647-14-5	Sodium chloride	340	340	nt	nt
7647-18-9	Antimony pentachloride	360	360	T	nt
7664-38-2	Phosphoric acid	370	370	T	T
7664-39-3	Hydrofluoric acid	370	370	T	T
7664-39-3	Hydrogen fluoride gas	350	350	T	T
7664-39-3	Hydrogen fluoride liquid	350 / 370	350 / 370	T	T
7664-41-7	Ammonia gas	350	350	T	T
7664-41-7	Ammonia liquid	350 / 380	350 / 380	T	nt
7664-93-9	Sulfuric acid	370	370	T	T
7681-49-4	Sodium fluoride	340	340	T	nt
7681-52-9	Sodium hypochlorite	340	340	T	nt
7697-37-2	Nitric acid	370	370	T	T
7705-08-0	Ferric chloride	340	340	T	nt
7718-54-9	Nickel chloride	340	340	nt	nt
7719-09-7	Thionyl chloride	360	360	T	nt

CAS Number	Index Name	Class	Sub-Class	Limited Use	Re-usable
4655-34-9	Isopropyl methacrylate	220	223	nt	nt
5076-20-0	Tetramethylethylene oxide	270	275	T	nt
5124-30-1	Methylene bis(cyclohexylisocyanate)	210	211	nt	nt
5216-25-1	4-Chlorobenzotrichloride	260	263	T	nt
5989-27-5	d-Limonene	290	296	T	nt
6032-29-7	2-Pentanol	310	312	nt	nt
6143-29-9	5-Norbornene-2-yl acetate	220	222	a	nt
6153-56-6	Oxalic acid dihydrate	100	104	T	nt
7722-64-7	Potassium permanganate	340	340	T	nt
7722-84-1	Hydrogen peroxide	300	300	T	T
7726-95-6	Bromine	330	330	T	T
7727-21-1	Potassium persulfate	340	340	nt	nt
7732-18-5	Water	590	590	nt	nt
7757-82-6	Sodium sulfate	340	340	nt	nt
7757-83-7	Disodium sulfite	340	340	nt	nt
7758-94-3	Ferrous chloride	340	340	T	nt
7758-98-7	Cupric sulfate	340	340	nt	nt
7775-27-1	Sodium persulfate	340	340	nt	nt
7778-39-4	Arsenic acid	370	370	nt	nt
7782-41-4	Fluorine	350	350	T	nt
7782-50-5	Chlorine	330 / 350	330 / 350	T	T
7782-99-2	Sulfurous acid	370	370	nt	nt
7783-00-8	Selenious acid	370	370	nt	nt
7783-06-4	Hydrogen sulfide	350 / 500	350 / 502	T	nt
7783-07-5	Hydrogen selenide	350	350	T	nt
7783-20-2	Ammonium sulfate	340	340	nt	nt
7783-50-8	Ferric fluoride	340	340	nt	nt
7783-54-2	Nitrogen trifluoride	350	350	T	nt
7783-70-2	Antimony pentafluoride	360	360	nt	nt
7783-82-6	Tungsten hexafluoride	350	350	T	nt
7784-18-1	Aluminum fluoride	360	360	nt	nt
7784-30-7	Aluminum phosphate	340	340	nt	nt
7784-34-1	Arsenic trichloride	340	340	T	nt
7784-42-1	Arsine	350	350	T	nt
7789-00-6	Potassium chromate	340	340	T	nt
7789-21-1	Fluorosulfonic acid	370	370	T	nt
7789-23-3	Potassium fluoride	340	340	nt	nt
7789-30-2	Bromine pentafluoride	360	360	nt	nt
7789-75-5	Calcium fluoride	340	340	nt	nt
7790-91-2	Chlorine trifluoride	350	350	T	nt

Copyright © 2004 E. I. du Pont de Nemours and Company. All rights reserved.

Chemical Index by Chemical Abstract System (CAS) Number

CAS Number	Index Name	Class	Sub-Class	Limited Use	Re-usable
7719-12-2	Phosphorus trichloride	360	360	T	nt
7803-62-5	Silane	480	480	T	nt
8001-58-9	Creosote	310	316	T	nt
8002-05-9	Crude oil	290 / 590	294 / 590	T	nt
8004-13-5	Dowtherm Heat Transfer Fluid	590	590	T	nt
8006-64-2	Turpentine	290	294	T	nt
8008-20-6	Kerosene	290	291	T	nt
8008-20-6	JP-8	290	291	T	nt
8008-20-6	Jet A fuel	290	291	T	nt
8012-95-1	Mineral oil	290	291	T	nt
8014-95-7	Oleum	370	370	T	T
8030-30-6	Naphtha	290	291	nt	nt
8030-32-4	VM and P naphtha	290	291	T	nt
8032-32-4	Mineral oil	290	291	T	nt
8052-41-3	Stoddard solvent	290	291	T	nt
9106-87-9	Polymethylene polyphenylpolyisocyanate	210	212	T	nt
10024-97-2	Nitrous oxide	350	350	T	nt
10025-67-9	Disulfur dichloride	500	502	T	nt
10025-78-2	Trichlorosilane	480	480	T	nt
10025-87-3	Phosphorus oxychloride	360	360	T	nt
10025-91-9	Antimony trichloride	340	340	nt	nt
10026-04-7	Silicon tetrachloride	360 / 480	360 / 480	T	nt
10034-85-2	Hydriodic acid	370	370	T	nt
10035-10-6	Hydrobromic acid	370	370	T	nt
10039-54-0	Hydroxylamine sulfate	500	507	nt	nt
10043-01-3	Aluminum sulfate	340	340	nt	nt
10043-35-3	Boric acid	370	370	nt	nt
10043-52-4	Calcium chloride	340	340	T	nt
10049-04-4	Chlorine dioxide	350	350	T	nt
10101-53-8	Chromic sulfate	340	340	nt	nt
10102-43-9	Nitric oxide	350	350	T	nt
10102-44-0	Nitrogen dioxide	350	350	T	nt
10217-52-4	Hydrazine hydrate	280	280	T	nt
10294-34-5	Boron trichloride	350 / 360	350 / 360	T	nt
10544-72-6	Nitrogen tetroxide	350	350	T	nt
10545-99-0	Sulfur dichloride	500	502	T	nt
26746-38-3	Dibutylphenol	310	316	nt	nt
28519-06-4	Chlorodecane mixed isomers	260	261	nt	nt

CAS Number	Index Name	Class	Sub-Class	Limited Use	Re-usable
7790-94-5	Chlorosulfonic acid	370 / 500	370 / 504	T	T
7791-25-5	Sulfuryl chloride	350 / 360	350 / 360	T	nt
7803-51-2	Phosphine	350	350	T	nt
7803-57-8	Hydrazine hydrate	280	280	T	nt
10588-01-9	Sodium dichromate	340	340	T	nt
11097-69-1	PCB	260	263	T	nt
12125-01-8	Ammonium fluoride	340	340	T	nt
12125-02-9	Ammonium chloride	340	340	T	nt
12135-76-1	Ammonium sulfide	340	340	nt	nt
13284-42-9	2-Pentenenitrile	430	431	T	nt
13463-39-3	Nickel carbonyl	470	470	T	nt
13463-67-7	Titanium dioxide	380	380	nt	nt
13473-90-0	Aluminum nitrate	340	340	nt	nt
13530-65-9	Zinc chromate	340	340	nt	nt
13780-03-5	Calcium bisulfate	340	340	nt	nt
13814-96-5	Lead fluoroborate	340	340	nt	nt
13952-84-6	sec-Butylamine	140	141	nt	nt
14307-35-8	Lithium chromate	340	340	nt	nt
14486-19-2	Cadmium fluoroborate	360	360	nt	nt
15120-17-9	Sodium arsenite	340	340	nt	nt
16721-80-5	Sodium hydrosulfide	340	340	T	nt
16752-77-5	Methomyl	230	233	T	nt
16872-11-0	Fluoroboric acid	370	370	T	nt
16961-83-4	Fluorosilicic acid	370	370	T	nt
19287-45-7	Diborane	350	350	T	nt
19686-73-8	1-Bromo-2-propanol	260 / 310	261 / 315	nt	nt
21645-51-2	Aluminum hydroxide	380	380	nt	nt
23135-22-0	Oxamyl	130	137	nt	nt
25013-15-4	Methylstyrene	290	292	nt	nt
25103-12-2	Trioctyl phosphate	460	462	nt	nt
25103-58-6	tert-Dodecyl mercaptan	500	501	nt	nt
25154-52-3	n-Nonyl phenol	310	316	nt	nt
25155-15-1	p-Cymene	290	292	nt	nt
25155-30-0	Dodecyl benzene sulfonate	500	507	nt	nt
25323-30-2	Dichloroethylene, all isomers	260	264	nt	nt
25550-58-7	Dinitrophenol	310 / 440	316 / 442	nt	nt
25899-50-7	cis-2-Pentenenitrile	430	431	T	nt
26447-14-3	1,2-Epoxy-3-(tolyoxy)propane	270	275	nt	nt

Copyright © 2004 E. I. du Pont de Nemours and Company. All rights reserved.

Chemical Index by Chemical Abstract System (CAS) Number

CAS Number	Index Name	Class	Sub-Class	Limited Use	Re-usable
30525-89-4	Paraformaldehyde	120	121	nt	nt
30894-74-7	2,3-Dichloro-6-isopropyl-S-triazine	270	274	T	nt
50782-69-9	VX Nerve Agent	460 / 595	462 / 595	T	nt
52583-42-3	Nitric acid, red fuming	370	370	T	nt
57292-32-7	Aluminum sulfate hydrate	340	340	T	nt
63885-09-6	Isoctaldehyde	120	121	nt	nt
64475-85-0	Mineral spirits	290	291	T	nt
67664-94-2	Epoxytrichloropropane	270	275	nt	nt
68131-30-6	Green liquor	590	590	T	T
68131-33-9	White liquor	590	590	T	T
68334-30-5	Diesel fuel	290	291	T	nt
86290-81-5	Gasoline	290	291 / 292	T	nt
95660-51-8	Skydrol®	460	462	T	nt
106602-80-6	Otto Fuel II	590	590	T	nt
191681-14-8	AFFF	590	590	T	nt
308074-23-9	Black Liquor	590	590	T	T

CAS Number	Index Name	Class	Sub-Class	Limited Use	Re-usable
26471-62-5	Toluene-1,3-diisocyanate	210	212	T	nt
mixture	Chemidize 727 ND	590	590	T	nt
mixture	Cyanex®	460	461	nt	T
mixture	Cyanogen bromide 30% in bromic acid	345 / 350	345 / 350	nt	T
mixture	m-Cresol 55%, p-Cresol 30%, Phenol 15%	310	316	T	nt
mixture	Decontaminating agent DS-2	590	590	T	nt
mixture	Dichlorotoluene	290	263	T	nt
mixture	Diesel test fuel	290	291	T	nt
mixture	DuPont Activators with hexamethylene diisocyanate	210 / 590	211 / 590	T	nt
mixture	Ethyl benzene 80%, 4,6-Dinitro-o-cresol 20%	590	590	T	nt
mixture	Ethylene oxide, 10% in HCFC 124	270	274	T	nt
mixture	Fuel oil	290	291	T	nt
mixture	Glade Intech 200	590	590	T	nt
mixture	Hexamethylene diisocyanate in DuPont Activators	590	590	T	nt
mixture	JP-4 jet fuel	290	291	T	nt
mixture	Organo-Tin Paint	470	470	T	nt
mixture	Sodium-t-amylate / t-amyl alcohol	590	590	T	nt
mixture	Tetramethyltin in n-pentane	590	590	T	nt

Copyright © 2004 E. I. du Pont de Nemours and Company. All rights reserved.

For more information about DuPont Personal Protection

Website: www.PersonalProtection.DuPont.com

Fax-On-Demand: 1-800-558-9329

Customer Service: 1-800-931-3456

Email: PersonalProtection@usa.DuPont.com

Effective June 2004. This guide replaces all previously published until superseded.

Copyright © 2004 E.I. du Pont de Nemours and Company. All rights reserved.
DuPont™, the DuPont Oval logo, The miracles of science™, Tyvek®, Tychem®, Responder®, Reflector® and Lannate® are trademarks or registered trademarks of E.I. du Pont de Nemours and Company.

StaSafe® is a registered trademark of Standard Safety Equipment Company.
Bladex® and Lupranate® are registered trademarks of BASF.
Cellosolve® and Carbitol® are registered trademarks of the Dow Chemical Company.
Cyanex® is a registered trademark of Cytec Industries, Inc.
Skydrol® is a registered trademark of Solutia, Inc.

DuPont Personal Protection is dedicated to providing a full range of innovative safety apparel solutions. We combine the best science, technology and expertise to protect people from hazards under even the most dangerous conditions.

Customer Service: 1-800-931-3456

www.PersonalProtection.DuPont.com

The miracles of science™

Copyright © 2004 E.I. du Pont de Nemours and Company. All rights reserved.
The DuPont Oval logo, DuPont™, The miracles of science™, Tyvek®, Tychem®, Responder® and Reflector® are trademarks or registered trademarks of E.I. du Pont de Nemours and Company.

H-96427 8/04 Printed in the USA